IJMTST is UGC Approved Journal with Journal Id: 43137

International Journal for Modern Trends in Science and Technology, 8(S02):53-57, 2022

ISSN: 2455-3778 online
DOI: https://doi.org/10.46501/IJMTST08S0209
Available online at: https://www.ijmtst.com/icceses2022.html

Commutation Torque Ripple Mitigation in the BLDC Motor Using Fuzzy Logic Controller Based NPC Inverter

Ch. Thanuja | P. Sai Vikas | G.Teja Swaroop | Ch.Siva Ganesh

Department of Electrical & Electronics Engineering, Godavari Institute of Engineering and Technology (A), JNTUK, Kakinada

To Cite this Article
Ch. Thanuja, P. Sai Vikas, G.Teja Swaroop and Ch.Siva Ganesh. Commutation Torque Ripple Mitigation in the BLDC Motor Using Fuzzy Logic Controller Based NPC Inverter. International Journal for Modern Trends in Science and Technology 2022, 8(S02), pp. 53-57. https://doi.org/10.46501/IJMTST08S0209

Article Info
Received: 26 April 2022; Accepted: 24 May 2022; Published: 30 May 2022.

ABSTRACT

This paper presents another power converter geography to stifle the force swell because of the stage current replacement of a brushless dc engine (BLDCM) drive framework. A blend of a three-level diode clipped staggered inverter (3-level DCMLI), an adjusted single-finished essential inductor converter (SEPIC), and a dc-transport voltage selector circuit is utilized in the proposed force swell concealment circuit. For effective concealment of force throb, the dc-transport voltage selector circuit is utilized to apply the directed dc-transport voltage from the changed SEPIC during the substitution stretch. To additionally moderate the force swell throb, the 3-level DCMLI is utilized in the proposed circuit. By utilizing fuzzy logic controller strategy can diminish the force swell really and further develop the speed accuracy and adjustment also. At last, reenactment results show that the proposed geography is an alluring choice to diminish the compensation force swell essentially at low-and high-velocity applications.

Keywords: Brushless direct current motor (BLDCM), dc-bus voltage control, modified single ended primary-inductor converter, three-level diode clamped multilevel inverter (3-level DCMLI), torque ripple, fuzzy logic controller

1.INTRODUCTION

Brushless direct current engine (BLDCM) drives are turning out to be more well known because of their powerful productivity, high force to weight and inactivity proportions, high power thickness, high dynamic response, high dependability, minimal size, and straightforward control. The BLDCMs with trapezoidal back electromotive power (EMF) are utilized broadly in clinical, flight, electric vehicles, and modern, and protection movement control applications [1]-[3]. Electronically commutated BLDCMs are profoundly dependable and require less support because of the end of high-wear parts, for example, standard mechanical commutator and brush get together [4], [5]. Notwithstanding, the throbbing force is one of the main points of contention in BLDCM. As displayed in Fig. 1, the BLDCM has a trapezoidal back EMF waveform, and a stator is taken care of by semi square wave line current. Normally, stage winding self-inductance misshapes the ideal semi square wave line current, which makes the force swell [4].

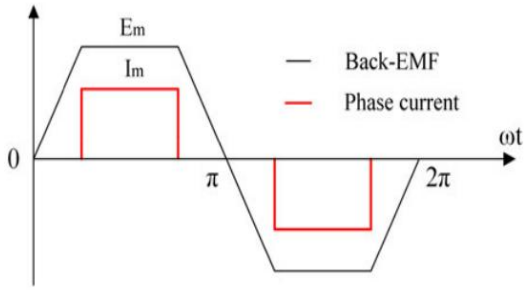

Fig. 1.1 Ideal back EMF and current reference waveforms of a single phase.

Strange vibration, undesirable speed vacillation, and sound are mostly
produced by the replacement force throb of BLDCM [6], [7]; in this manner, lessening the force throb is fundamental to further developing the force execution of the BLDCM drive framework [8]-[15]. The reasons for force swell in BLDCM during recompense span have been explored for both 120° and 180° electrical conduction methods of the inverter and a composite exchanging mode has been proposed for successful force swell concealment at all paces [8]. In [9], a variable information voltage strategy has been proposed for the viable force swell concealment during the freewheeling time of BLDCM. In this technique, the time of the freewheeling area and advanced voltage have been assessed utilizing the Laplace change. A clever current control conspires to utilize the loser current regulator has been accounted for the force swell decrease of BLDCM utilizing a solitary dc-transport current sensor [10]. Various crossover converter geographies have been proposed with a dc converter to further develop force execution of two-level (2-level) inverter-took care of BLDCM [11]-[14]. In [11], a buck converter has been utilized between the dc supply and ordinary 2-level inverter for thespeed control of BLDCM, which can altogether lessen the force swell at lower speeds. A super-lift Luo-converter has been utilized before the 2-level inverter to lift the dc-transport voltage to the ideal incentive for the force swell concealment at rapid work conditions [12]. In [13], clever circuit geography with a single-finished essential inductor converter (SEPIC) and a switch determination circuit has been proposed for force swell concealment of BLDCM drive with dc-transport voltage control.

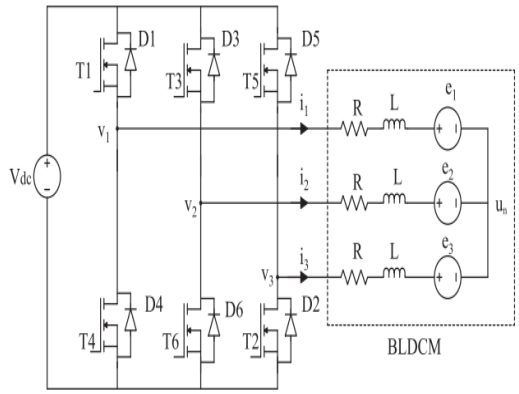

Fig. 1.2. Equivalent model of 2-level inverter-fed BLDCM.

To decrease the substitution force swell, a voltage control methodology has been proposed to level the huge number of paces of approaching and active stage flows. Clever circuit geography has been proposed for force swell concealment of the BLDCM drive framework which is worked by a three-level diode braced staggered inverter (3-level DCMLI) with two SEPICs and a compensation voltage determination circuit [14]. In [15], a typical force control strategy utilizing one-cycle control has been proposed utilizing dc-transport voltage and current estimations, without utilizing back EMF and exact rotor position data. To smother the force swell for BLDCM, an ongoing enhancement method has been proposed in both conduction mode and substitution mode utilizing indispensable variable design control [16]. In [17], a vector approach has been accounted for the concealment of force wave of BLDCM drive by integrating the engine current inventory. For low inductance BLDCM, original force swells decrease procedures have been proposed in light of the prompt force control approach. A paid strategy has been created to address the position mistake because of misalignments of magnets and Hall-impact sensors which works on the precision of momentary force assessment. Additionally, versatile deviation remuneration work has been created to kill an issue related with a voltage unbalance between three-stage windings [18], [19].

The 3-level DCMLI geography gives a huge decrease in swell current for low-inductance BLDCM without the requirement for extremely high exchanging recurrence than the 2-level inverter [30]. Likewise, it works with a lower number of dc sources and power semiconductor gadgets than FC staggered inverter and CHB staggered inverter.

In this paper, original converter geography is proposed to lessen the force wave of the BLDCM drive

framework. The proposed converter is formed an altered SEPIC and a MOSFET-based 3-level DCMLI. The adjusted SEPIC works with high static increase and less exchanging voltage stress than traditional dc converters [31]. Thus, the altered SEPIC is utilized in this proposed force swell concealment circuit and the obligation cycle is acclimated to get the ideal dc-transport voltage in view of the turning velocity of the BLDCM. The 3-level DCMLI is utilized for an additional decrease of the ongoing wave and as well as the resultant force swell. The MOSFET-based voltage selector circuit is utilized to apply managed dc-transport voltage for effective replacement force swell concealment.. By utilizing the PWM_ON_PWM technique can lessen the force swell successfully and further develop the speed accuracy and adjustment too. Recreation results show that the proposed converter geography with the dc-transport voltage selector circuit fundamentally lessens the force swell during the compensation span.

2. NOVEL TOPOLOGY FOR THE BLDC MOTOR DRIVE SYSTEM

A Diagram of proposed new converter geography for the BLDCM drive framework in light of a 3-level DCMLI and a changed SEPIC is displayed in Fig. 2 In this geography, the 3-level DCMLI is proposed to decrease the current wave, and the changed SEPIC is incorporated to change the dc-transport voltage in view of the rotational speed of the BLDCM. The dc-transport voltage selector circuit is built with power MOSFETs (S1, S2, S3, andS4). It is utilized to choose the ideal dc-transport voltage for huge force swell decrease during recompense stretch. The MOSFET-based 3-level DCMLI is worked at an exchanging of 80 kHz, which gives critical force swell concealment than the traditional 2-level inverter. In this 3-level DCMLI, the dc-transport voltage isisolated into 3 levels by the capacitors C5 and C6. To acquire the ideal recompense voltage, the obligation pattern of the changed SEPIC can be changed during the non substitution time frame to keep up with Vdc = 8Em.

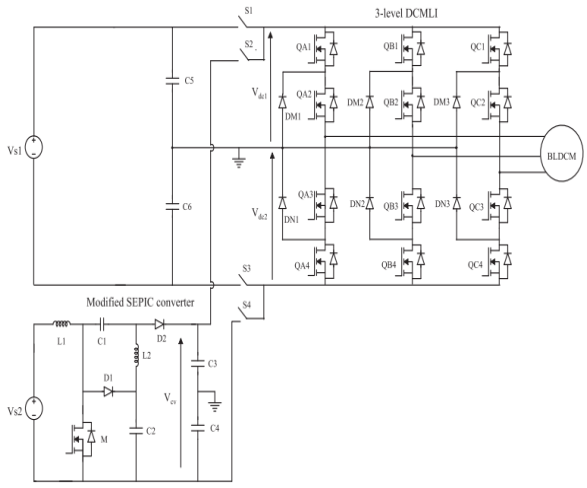

Fig. 2 Proposed converter topology with a dc-bus voltage selector circuit for BLDCM.

3. FUZZY CONTROLLER

The word Fuzzy means dubiousness. Fuzziness happens when the limit of snippets of data isn't obvious. In 1965 Lotfi A. Zahed propounded the fuzzy set hypothesis. Fuzzy set hypothesis displays gigantic potential for compelling tackling of the vulnerability in the issue. Fuzzy set hypothesis is an incredible numerical instrument to deal with the vulnerability emerging because of dubiousness. Grasping human discourse and perceiving manually written characters are a few normal occasions where fluffiness shows.

The fuzzy set hypothesis is an augmentation of the traditional set hypothesis where components have fluctuating levels of participation. Fuzzy rationale utilizes the entire stretch somewhere in the range of 0 and 1 to depict human thinking. In FLC the info factors are planned by sets of participation capacities and these are called as "Fuzzy SETS".

A fuzzy set includes from an enrollment work which could be characterized by boundaries. The worth somewhere in the range of 0 and 1 uncovers a level of participation to the fuzzy set. The most common way of switching the fresh contribution over completely to a fuzzy worth is called as "fuzzification." The result of the Fuzzier module is communicated with the principles. The essential activity of FLC is built from fluffy control rules using the upsides of fluffy sets overall for the blunder and the difference in mistake and control activity. Fundamental fuzzy module is displayed in fig.6. The outcomes are joined to give a fresh result controlling the result variable and this cycle is called as "DEFUZZIFICATION."

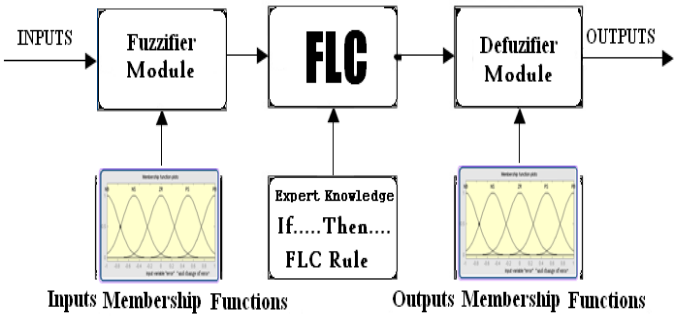

Fig.3.1 Fuzzy Basic Module

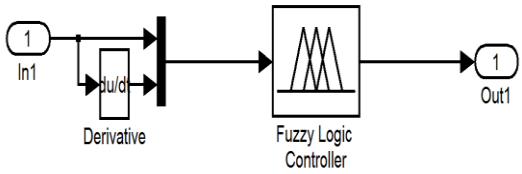

Fig4.2: Fuzzy Logic Controller Controller

4. SIMULATION DIAGRAMS:

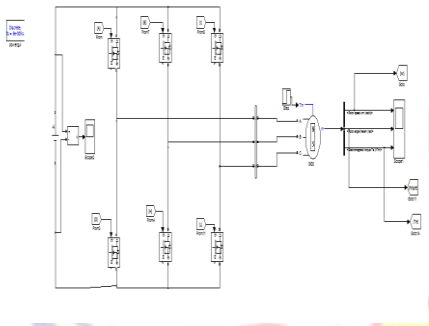

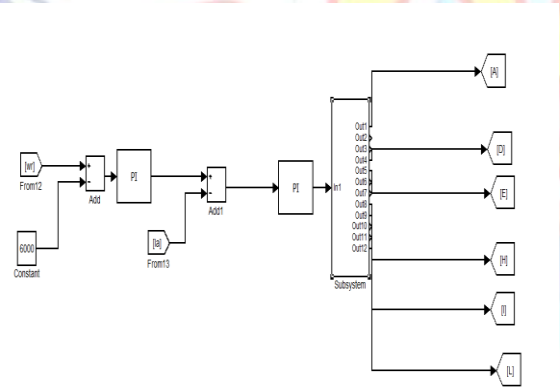

Control Diagram

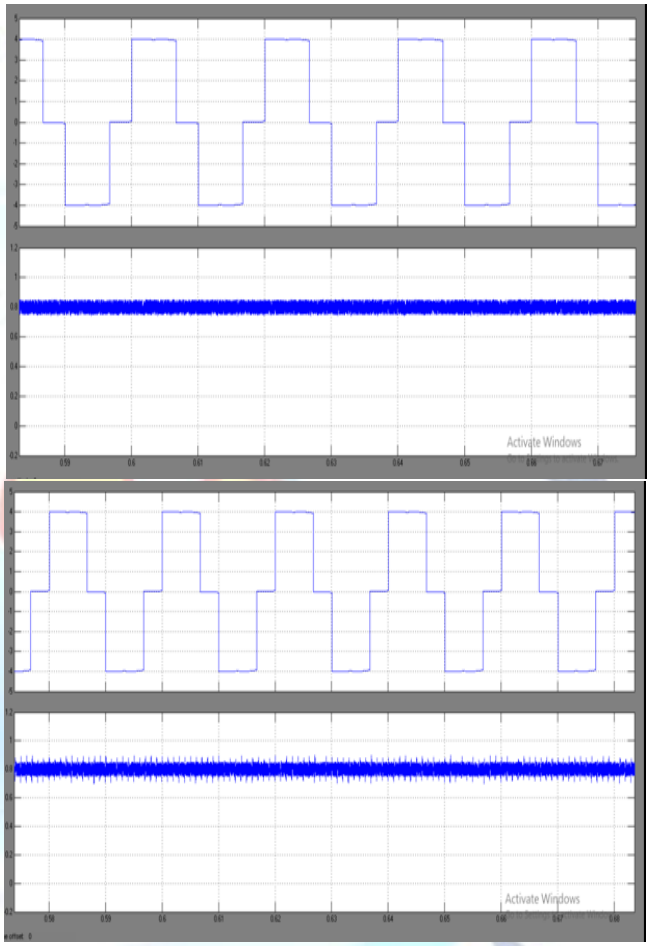

Fig.4.3.Simulated waveforms of stage current and force at 6000 r/min and0.825 Nm with 5 kHz exchanging recurrence.. (a) BLDCM took care of by a 2-level inverter with SEPIC and a switch determination circuit. (b) BLDCM took care of by proposed geography

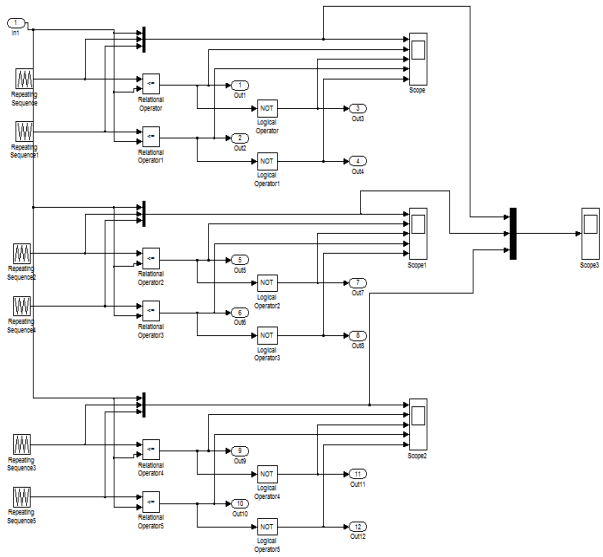

Subsystem

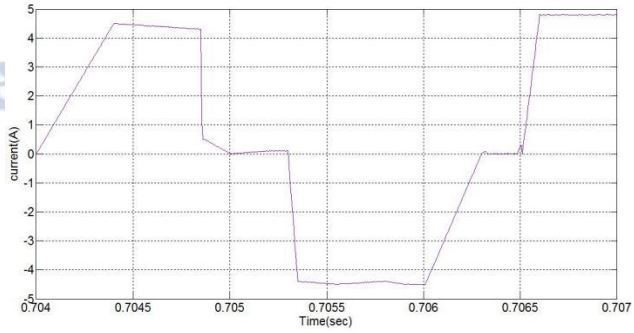

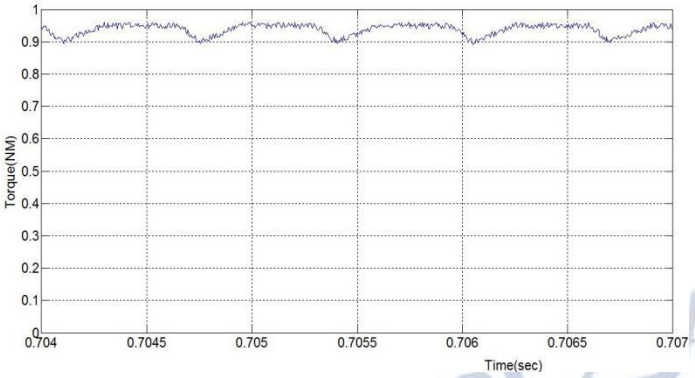

Fig.4.4(d). BLDCM fed by proposed topology.

5. CONCLUSION

In this paper, a compensation force swell decrease circuit has been proposed utilizing 3-level DCMLI with adjusted SEPIC and a dc-transport voltage selector circuit. A research center constructed drive framework has been tried to check the proposed converter geography. The recommended dc-transport voltage control technique is more viable in force swell decrease in the replacement stretch. The proposed geography with fluffy regulator achieves the fruitful decrease of force swell in the substitution period are introduced to analyze the presentation of the proposedcontrol method with the traditional 2-level inverter, 3-level DCMLI, 2-level inverter with SEPIC and the switch determination circuit took care of BLDCM. To acquire huge force swell concealment, quietness, and higher effectiveness, 3-level DCMLI with adjusted SEPIC and the voltage selector circuit is the most appropriate decision to get elite execution activity of BLDCM. The proposed geography might be utilized for the force swell concealment of BLDCM with the exceptionally low stator winding inductance.

Conflict of interest statement

Authors declare that they do not have any conflict of interest.

REFERENCES

[1] N. Milivojevic, M. Krishnamurthy, Y. Gurkaynak, A. Sathyan, Y.-J. Lee, and A. Emadi, "Stability analysis of FPGA-based control of brushless dc motors and generators using digital PWM technique," IEEE Trans. Ind. Electron., vol. 59, no. 1, pp. 343–351, Jan. 2012.

[2] X. Huang, A. Goodman, C. Gerada, Y. Fang, and Q. Lu, "A single sided matrix converter drive for a brushless dc motor in aerospace applications," IEEE Trans. Ind. Electron., vol. 59, no. 9, pp. 3542–3552, Sep. 2012.

[3] X. Huang, A. Goodman, C. Gerada, Y. Fang, and Q. Lu, "Design of a five-phase brushless dc motor for a safety critical aerospace application," IEEE Trans. Ind. Electron., vol. 59, no. 9, pp. 3532–3541, Sep. 2012.

[4] J.-G. Lee, C.-S. Park, J.-J. Lee, G. H. Lee, H.-I. Cho, and J.-P. Hong, "Characteristic analysis of brushless motor considering drive type," in Proc. Korean Inst. Electr. Eng., Jul. 2002, pp. 589–591.

[5] T. H. Kim and M. Ehsani, "Sensorless control of BLDC motors from near-zero to high speeds," IEEE Trans. Power Electron., vol. 19, no. 6, pp. 1635–1645, Nov. 2004.

[6] T. J. E. Miller, Switched Reluctance Motor and Their Control. London, U.K.: Clarendon, 1993.

[7] K. Ilhwan, N. Nobuaki, K. Sungsoo, P. Chanwon, and Chansu Yu, "Compensation of torque ripple in high performance BLDC motor drives," Control Eng. Pract., vol. 18, pp. 1166–1172, Oct. 2010.

[8] S. S. Bharatkar, R. Yanamshetti, D. Chatterjee, and A. K. Ganguli, "Reduction of commutation torque ripple in a brushless dc motor drive," in Proc. 2008 IEEE 2nd Int. Power Energy Conf., 2008, pp. 289–294.

[9] K.-Y. Nam, W.-T. Lee, C.-M. Lee, and J.-P. Hong, "Reducing torque ripple of brushless dc motor by varying input voltage," IEEE Trans. Magn., vol. 42, no. 4, pp. 1307–1310, Apr. 2006.

[10] J. H. Song and I. Choy, "Commutation torque reduction in brushless dc motor drives using a single dc current sensor," IEEE Trans. Power Electron., vol. 19, no. 2, pp. 312–319, Mar. 2004.

[11] X. F. Zhang and Z. Y. Lu, "A new BLDC motor drives method based on BUCK converter for torque ripple reduction," Proc. IEEE Power Electron. Motion Control Conf., 2006, pp. 1–4.

[12] W. Chen, C. Xia, and M. Xue, "A torque ripple suppression circuit for brushless dc motors based on power dc/dc converters," in Proc. IEEE Ind. Electron. Appl. Conf., 2008, pp. 1453–1457.

[13] T. Shi, Y. Guo, P. Song, and C. Xia, "A new approach of minimizing commutation torque ripple for brushless dc motor based on dc–dc converter," IEEE Trans. Ind. Electron., vol. 57, no. 10, pp. 3483–3490, Oct. 2010.

[14] V. Viswanathan and S. Jeevananthan, "Approach for torque ripple reduction for brushless dc motor based on three-level neutral-point-clamped inverter with dc-dc converter," IET Power Electron., vol. 8, no. 1, pp. 47– 55, 2014.

[15] T. Sheng, X. Wang, J. Zhang, and Z. Deng, "Torque-ripple mitigation for brushless dc machine drive system using one-cycle average torque control," IEEE Trans. Ind. Electron., vol. 62, no. 4, pp. 2114–2122, Apr. 2015.

[16] C. Xia, Y. Xiao, W. Chen, and T. Shi, "Torque ripple reduction in brushless dc drives based on reference current optimization using integral variable structure control," IEEE Trans. Ind. Electron., vol. 61, no. 2, pp. 738–752, Feb. 2014.

[17] G. Buja, M. Bertoluzzo, and R. K. Keshri, "Torque ripple-free operation of PM BLDC drives with petal-wave current supply," IEEE Trans. Ind. Electron., vol. 62, no. 7, pp. 4034–4043, Jul. 2015.