IJMTST is UGC Approved Journal with Journal Id: 43137

International Journal for Modern Trends in Science and Technology, 8(S02):12-16, 2022

ISSN: 2455-3778 online
DOI: https://doi.org/10.46501/IJMTST08S0203
Available online at: https://www.ijmtst.com/vol8si02.html

Improvement of Power Quality using Optimization Based PV Integrated Multilevel Inverter

B. Poorna Manikanta | P. Kiran | K. Sai vinay | Dr. D. Ravi Kishore

Department of Electrical & Electronics Engineering, Godavari Institute of Engineering and Technology (A), JNTUK, Kakinada

To Cite this Article

B. Poorna Manikanta, P. Kiran, K. Sai vinay and D. Ravi Kishore. Improvement of Power Quality using Optimization Based PV Integrated Multilevel Inverter. International Journal for Modern Trends in Science and Technology 2022, 8(S02), pp. 12-16. https://doi.org/10.46501/IJMTST08S0203

Article Info

Received: 26 April 2022; Accepted: 24 May 2022; Published: 30 May 2022.

ABSTRACT

In recent periods, the design of utility network is highly crucial in power system due to large changes in the approaches of the power supply. The primary duty is to provide better power quality of power to the distributed consumers. Thus, the utilities are always emphasing on advanced methodologies to supply good power quality (PQ) to its consumers. Further, as there is wide requirement of energy demand, it is necessary to incorporate different distributed supplies to the system. Therefore, in this paper, a photovoltaic (PV) combined multilevel inverter (MLI) for enhancing the PQ in the utility network. For operation of the multilevel inverter a newly developed optimization technique is employed. The proposed method is related with other existing methods. The PV system is also operated using a modified version of the conventional maximum power point technique (MPPT). The overall performance of the system is verified and analysed using MATLAB/Simulink software.

KEYWORDS: Multilevel inverter, maximum power point technique power quality, total harmonics distortions.

1.INTRODUCTION

It is an extremely challenging job to deal with the power quality (PQ) improvement schemes provided into power system with huge penetration of the distributed resources.The distributed resources are widely implemented and needs new methods for operating and managing the utility network so as to maintain the consistency and quality of source power.

Furthermore, the liberalization of the electricity grids directs to a new organization strategy, where the energy and power trading is an important aspect. The semiconductor devices perform an essential part in the integration of distributed resources into the utility network and rapidly increasing because the applications become more incorporated with the grid integrated networks. The PV sources are treated as one of the the most favourable sources in the power system. The PV incorporation and harmonics reduction are two major challenges in the modern power distribution system [1]. Different types of PQ issues may happen in utility network which may completely danger the consistency of the supply network.

In industrial, commercial and domestic sector, the non-linear loads are used widely. These loads generate the harmonics in the utility network. Due to this distorted harmonic current, supply voltage gets distorted. The harmonics puts some adverse effects on the system like: faulty of sensitive equipment, resonance concerns, conductors overheating and the point of common coupling (PCC) becomes disturbed because of harmonic fall in the network impedances.

In recent trends the design of MLI has appeared substitute role in the range of high-power medium-voltage energy control. MLI provides merits

such as drawing source current with small distortions, works at lower switching frequency, and produce less common-mode voltage, and thereby reducing the pressure on the motor bearings.

Therefore, the hybrid shunt active power filter (HSAPF) with MLI [2] is used to reduce the PQ issues under different operating conditions by adding the MLI current in the utility network.

This research work will definitely have lots impact on the power industries to change the paradigm of PQ issues. This will further motivate the researchers and engineers to implement the MLIs in real-time so as to improve the performance of the power system to enhance the reliability of power supply. This will indirectly provide better comfort to the society in various applications.

Further, compared to the conventional two-level design, the proposed design provides economic and low design power semiconductors. MLI offers several freedom degrees which are appropriate for the converter to run under any fault conditions which in other form develops system reliability.

Numerous authors have adopted several methodologies for explaining complex optimization issues which are discussed in detail.

Out of different optimization approach, the PSO and FO are implemented in maximum study areas as they are utmost possible to meet near the global best clarification. These approach hold many means on the problem space related to the conventional algorthims which improve simply a solution point during the search.

These methods are utilised to support optimal tuning the constraints of MLI to increase the compensation capacity of MLI. PSO is related to obtain the optimal gains implemented to increase the compensating capacity of the MLI. But, PSO offer disadvantages such as it get trapped under local minima instead of global minima. It performs lower convergence speed which reduces compensating operation of MLI.

While, FO is a swarm intelligence method which occurs from the light attenuation over the distance and pointed for reducing the optimizationproblems. The use of the method is useful in several real-time optimization problems.

The defective choice of the FO parameters strictly influences [17] the convergence speed and achieves suboptimal keys. However, the FO method only focuses on adjusting the variables of the PI optimally.

This literature presents the predator-prey (PP) concept with fire-fly optimization (PPFO) which is engaged to findout the global best solution [18]. The PPFO adjusts the behaviour of PP and FO, which reprieves to escape from the suboptimal traps, endorsing the optimal global scheme.

The tremendous implementation of distributed sources is a big distress to emphasis on the deficiency of these sources in the upcoming days. Consequently, more study is done to spend on distributed sources.

However, the solar source is considered to be the prominent and possible energy resources for fulfilling the load needs which is suitable to be engaged in several sectors using several power converters. The Adaptive Perturb and Observe–Fuzzy (APOF) [23] MPPT is implemented in the proposed design. APOF uses the advantages of Perturb and Observe (P&O) and a fuzzy logic (FL) for tracing the MPP and develops the performance of the system.

Therefore, the main contributions in this paper are to provide active power of the PV and decrease the source current harmonics. The MPPT is implemented using the ASINC method for obtaining the maximum power from the sun and finally for reduction of harmonics the PPFO method is utilized.

2. REALATED WORK

The proposed design can associate directly to the PDS instead of using a low-frequency boost transformer. The essential inductance for the grid connection is decreased due to the multilevel signals of the MLI. The PV attached MLI design is revealed in Figure 1. In this work, a two-stage inverter topology is provided. In the first part, the PV array operation with a DC/DC boost converter (DBC) is analyzed.

The second part is comprised of MLI associated to the grid. The general circuit configuration of MLI based active power filteris illustrated in Figure 2.

In each module, the DC/DC boost converter is supportive in tracing the MPP of its consistent PV and varies from one module to another.

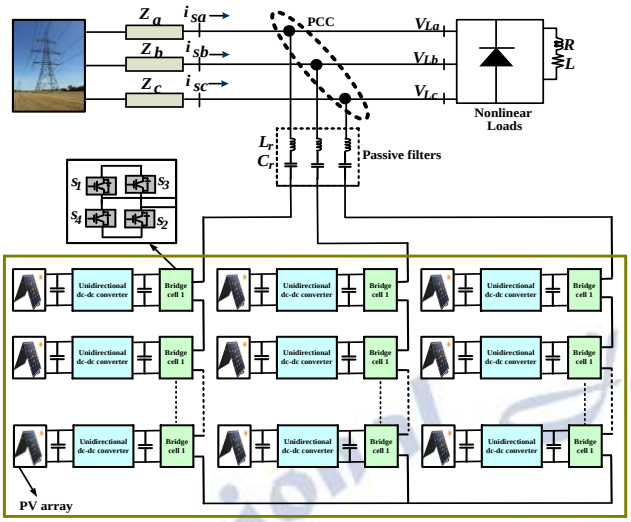

Figure 1: Proposed block diagram

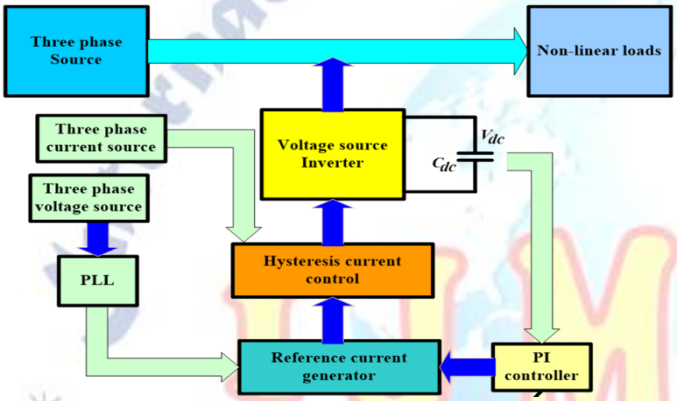

Figure 2: General circuit configuration of active power filter

3. RESULT ANALYSIS

In the grid connected PV system, the loads connected are non-linear in nature. Therefore the loads current are fully harmonics content and put an adverse effect on the PV integrated system. Therefore the operation of the proposed power system is analysed using the PPFO harmonics reduction techniques and the APOF MPPT method. firstly, the system is investigated without using any filtering techniques and verified that there is maximum harmonics in the grid current. Therefore, to reduce the harmonics content in the source current the proposed MLI is implemented using the soft computing approaches.

The working of MLI is calculated with use of current compensating techniques. The MLI in the PV integrated system is designed using PSO, FO and PPFO methods.

The outcomes provide details on supply voltage/ current, load and compensating current and dc-bus voltage under various working conditions and provided in Figure. 3 (a) and (b) respectively with PSO and FO methods.

The system performance with the PPFO method, illustrating source voltage and current, compensation current and dc-link voltage, using balanced sinusoidal source voltage condition, is showed in Figure 3 (c).

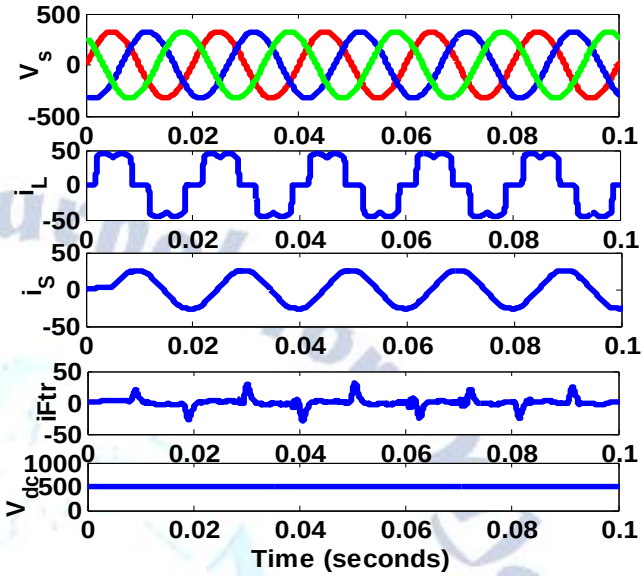

(a)

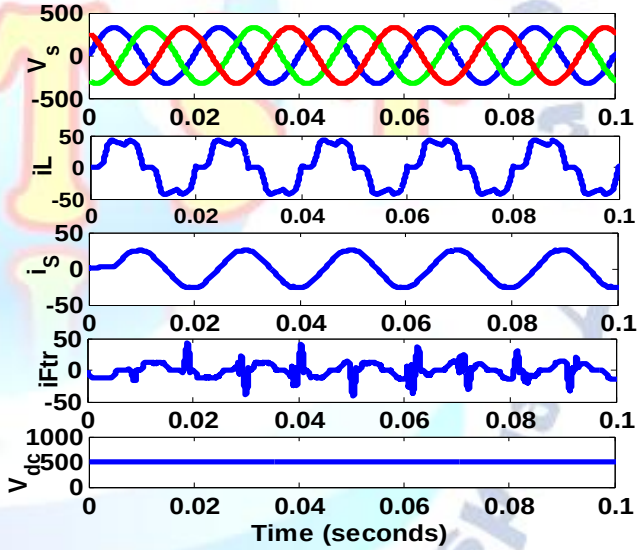

(b)

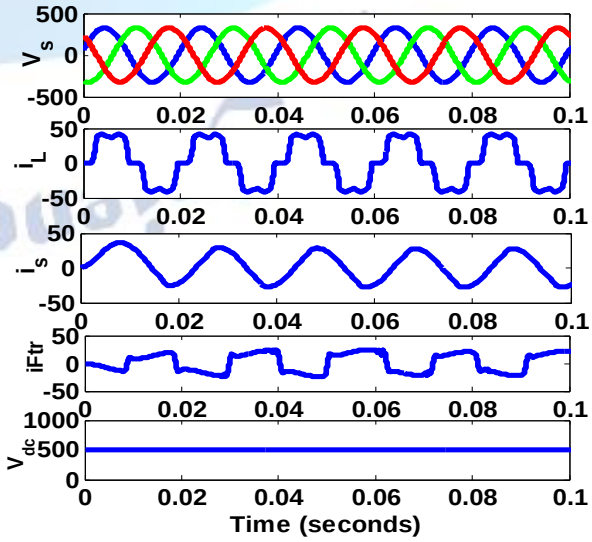

(c)

Figure 3: Waveform characterstics of MLI during balanced sinusoidal supply (a) PSO (b) FO and (c) PPFO

Harmonic waveform for PSO, FO and PPFO methods are found to be 2.61%, 2.45% and 2.08% respectively. Figure 4 signifies the % THD values of PSO, FO and PPFO methods.

The performance during balanced sinusoidal source voltage, the proposed PPFO based MLI provides the better performance for reducing the harmonics components in comparision to other controllers.

A comparative analysis of different controllers is presented in Table 1.

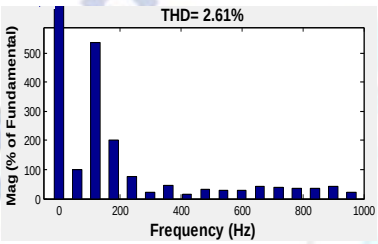

(a)

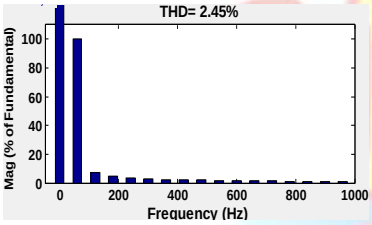

(b)

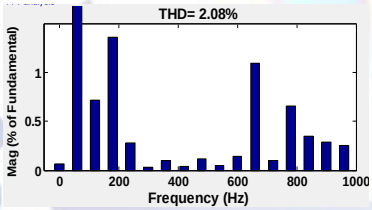

(c)

Figure 4: percentage THD under balanced sinusoidal supply with (a) PSO (b) FO and (c) PPFO

Table 1: Comparative analysis of various techniques

Techniques	% THD
PSO	2.61
FO	2.45
PPFO	2.08

4. CONCLUSION

The PV integrated MLI is accomplished under several scenarios of source voltage. The PQ improvement in the utility network is performed with Simulink. The MLI reduces the harmonics content at low power frequency. The behaviour of the MLI is observed by means of the PPFO method. PPFO delivers improved performance compared with PSO and FO methods with regard to harmonics reduction and lowering the percentage THD value.

Conflict of interest statement

Authors declare that they do not have any conflict of interest.

REFERENCES

[1] S. R. Das, P. K. Ray, A. K. Sahoo, K. Balasubramanian, G. S. Reddy, "Improvement of Power Quality in a Three-Phase System Using an Adaline-Based Multilevel Inverter," Front. Energy Res., Vol. 8 (23), 2020.

[2] S. R. Das, P. K. Ray, A. K. Mishra, A. Mohanty, "Performance of PV integrated multilevel inverter for PQ enhancement," International Journal of Electronics, Vol. 1(38), 2020.

[3] Hasan MM, Abu-Siada A. A high frequency linked modular cascaded multilevel inverter. In2016 IEEE Industrial Electronics and Applications Conference (IEACon) 2016 Nov 20 (pp. 47-51). IEEE.

[4] M. Badoni, A. Singh, B. Singh, "Adaptive neuro fuzzy inference system least-mean-square-based control algorithm for DSTATCOM," IEEE Transactions on industrial informatics, Vol. 12(2):483-92, 2016.

[5] J. Rodriguez, J. S Lai, F. Z. Peng, "Multilevel inverters: a survey of topologies, controls, and applications," IEEE Transactions on industrial electronics, Vol. 49(4):724-38, 2002.

[6] C. N. Bhende, S. Mishra, S. K. Jain, "TS-fuzzy-controlled active power filter for load compensation," IEEE transactions on power delivery, Vol. 21(3):1459-65, 2006.

[7] S. Janpong, K. L. Areerak, K. N. Areerak, "A literature survey of neural network applications for shunt active power filters," World Academy of Science, Engineering and Technology, vol. 60:392-8, 2011.

[8] Long Q. A constraint handling technique for constrained multi-objective genetic algorithm. Swarm and Evolutionary Computation. 2014 Apr 1;15:66-79.

[9] Tian D, Shi Z. MPSO: Modified particle swarm optimization and its applications. Swarm and evolutionary computation. 2018 Aug 1;41:49-68.

[10] Das S, Mullick SS, Suganthan PN. Recent advances in differential evolution–an updated survey. Swarm and Evolutionary Computation. 2016 Apr 1;27:1-30.

[11] Babu TS, Priya K, Maheswaran D, Kumar KS, Rajasekar N. Selective voltage harmonic elimination in PWM inverter using bacterial foraging algorithm. Swarm and Evolutionary Computation. 2015 Feb 1;20:74-81.

[12] Ismkhan H. Effective heuristics for ant colony optimization to handle large-scale problems. Swarm and Evolutionary Computation. 2017 Feb 1;32:140-9.

[13] Akbari R, Hedayatzadeh R, Ziarati K, Hassanizadeh B. A multi-objective artificial bee colony algorithm. Swarm and Evolutionary Computation. 2012 Feb 1;2:39-52.

[14] Satapathy SC, Naik A. Modified Teaching–Learning-Based Optimization algorithm for global numerical optimization—A

comparative study. Swarm and Evolutionary Computation. 2014 Jun 1;16:28-37.

[15] Rashedi E, Rashedi E, Nezamabadi-pour H. A comprehensive survey on gravitational search algorithm. Swarm and evolutionary computation. 2018 Aug 1;41:141-58.

[16] Fister I, Fister Jr I, Yang XS, Brest J. A comprehensive review of fire-fly algorithms. Swarm and Evolutionary Computation. 2013 Dec 1;13:34-46.

[17] Abd-Elazim SM, Ali ES. Load frequency controller design of a two-area system composing of PV grid and thermal generator via fire-fly algorithm. Neural Computing and Applications. 2018 Jul 1;30(2):607-16.

[18] Mahaboob S., Ajithan S.K., Jayaraman S. Optimal design of shunt active power filter for power quality enhancement using predator-prey based fire-fly optimization', Swarm and Evolutionary Computation (2019) 44 pp.522–533.

[19] Esram T., Chapman P. L.: 'Comparison of photovoltaic array maximum power point tracking techniques', IEEE Trans. on energy conver., 2007, 22, (2), pp. 439-449

[20] Mohanty S, Subudhi B, Ray PK. A new MPPT design using grey wolf optimization technique for photovoltaic system under partial shading conditions. IEEE Transactions on Sustainable Energy. 2015 Oct 26;7(1):181-8.

[21] Bendib B, Belmili H, Krim F. A survey of the most used MPPT methods: Conventional and advanced algorithms applied for photovoltaic systems. Renewable and Sustainable Energy Reviews. 2015 May 1;45:637-48.

[22] Koad RB, Zobaa AF, El-Shahat A. A novel MPPT algorithm based on particle swarm optimization for photovoltaic systems. IEEE Transactions on Sustainable Energy. 2016 Sep 7;8(2):468-76.

[23] M. M. Zainuri, M. M. Radzi, A. C. Soh, N. A. Rahim, "Adaptive P&O-fuzzy control MPPT for PV boost dc-dc converter,"In 2012 IEEE International Conference on Power and Energy (PECon) 2012 Dec 2 (pp. 524-529). IEEE.