As per UGC guidelines an electronic bar code is provided to seure your paper

International Journal for Modern Trends in Science and Technology, 7(09): 177-181, 2021
Copyright © 2021 International Journal for Modern Trends in Science and Technology
ISSN: 2455-3778 online
DOI: https://doi.org/10.46501/IJMTST0709028
Available online at: http://www.ijmtst.com/vol7issue09.html

Power System Stability Improvemet with TCSC and SSSC Controller

SuradaYedukondala Rao[1], Dr. CH.V.V.S. Bhaskara Reddy[2]

[1]PG Student, Dept of EEE, Andhra University College of Engineering, Visakhapatnam, India.
[2]Professor, Dept of EEE, Andhra University College of Engineering, Visakhapatnam, India.

To Cite this Article
SuradaYedukondala Rao[1], Dr. CH.V.V.S. Bhaskara Reddy[2]. Power System Stability Improvemet with TCSC and SSSC Controller. *International Journal for Modern Trends in Science and Technology* 2021, *7* pp. 177-181. https://doi.org/10.46501/IJMTST0709028

Article Info
Received: 17 August 2021; Accepted: 12 September 2021; Published: 17 September 2021

ABSTRACT

Stability is a major issue which explains stable operation of electrical power system. Conventional methods adopted for the enhancement of transient stability (TS) include circuit breakers, fast acting exciters, and reduced total transfer reactance of the system. In this paper, Flexible AC Transmission System (FACTS) controller is used for effective utilization of transmission system. TCSC and SSSC allows the fundamental capacitive reactance to be smoothly controlled over a wide range. The TCSC controller can be designed to control the power flow, to increase the transfer limits or to improve the transient stability. The SSSC controller can provide a very fast action to increase the synchronization power through quick changing of the equivalent capacitive reactance to the full compensation in the first few cycles after a fault, hence subsequent oscillations are damped. In the present work TCSC and SSSC controllers for single machine infinite bus (SMIB) and multi-machine power system is designed using SIMULINK (a software tool associated with MATLAB). Multi-machine power system with turbine and governing system is modeled. Modeling is done for system with two controllers.

KEYWORDS: FACTS, Optimization, Power system Stability, TCSC, ANN controller

INTRODUCTION

Recent development of power electronics introduces the use of Flexible AC transmission Systems (FACTS) controllers in power systems. FACTS controllers are capable of controlling the network condition in a very fast manner and this unique feature of FACTS can be exploited to improve the stability of a power system. The detailed explanations about the FACTS controllers are well documented in the literature and can be found in [1-3]. Thyristor Controlled Series Compensator (TCSC) is one of the important members of FACTS family that is increasingly applied with long transmission lines by the utilities in modern power systems. It can have various roles in the operation and control of power systems, such as scheduling power flow; decreasing unsymmetrical components; reducing net loss; providing voltage support; limiting short-circuit currents; mitigating sub-synchronous resonance (SSR); damping the power oscillation; and enhancing transient stability.

The power system is a complex network comprising of numerous generators, transmission lines, variety of loads and transformers. As a consequence of increasing power demand, some transmission lines are more loaded than was planned when they were built. With the increased loading of long transmission lines,

the problem of transient stability after a major fault can become a transmission limiting factor. Transient stability refers to the capability of a system to maintain synchronous operation in the event of large disturbances such as multi-phase short-circuit faults or switching of lines. The resulting system response involves large excursions of generator rotor angles and is influenced by the nonlinear power angle relationship. Stability depends upon both the initial operating conditions of the system and the severity of the disturbance. Recent development of power electronics introduces the use of flexible ac transmission system (FACTS) controllers in power systems. FACTS controllers are capable of controlling the network condition in a very fast manner and this feature of FACTS can be exploited to improve the voltage stability, and steady state and transient stabilities of a complex power system.

Thyristor Controlled Series Capacitor (TCSC) is one of the important members of FACTS family that is increasingly applied with long transmission lines by the utilities in modern power systems. It can have various roles in the operation and control of power systems, such as scheduling power flow; decreasing unsymmetrical components; reducing net loss; providing voltage support; limiting short-circuit currents; mitigating sub-synchronous resonance (SSR); damping the power oscillation; and enhancing transient stability. Among the available FACTS devices, the Unified Power Flow Controller (UPFC) is the most versatile one that can be used to improve steady state stability, dynamic stability and transient stability. The UPFC can independently control many parameters since it is the combination of Static Synchronous Compensator (STATCOM). These devices offer an alternative mean to mitigate power system oscillations. It has been reported in many papers that UPFC can improve stability of single machine infinite bus (SMIB) system and multi-machine system. The inter-area power system has special characteristic of stability behavior. This paper investigates the improvement of transient stability of a two-area power system with a UPFC. A Matlab/Simulink model is developed for a two-area power system with a UPFC. The performance of UPFC is compared with other FACTS devices such as SVC, TCSC, and STATCOM respectively. From the simulation results, it is inferred that UPFC is an effective FACTS device for transient stability improvement.

MODEL OF MULTIMACHINE POWER SYSTEM

The methodology given in [1] describes dynamic modeling of a general m-machine, n-bus system. This model represents each machine by a two -axis model and the excitation system is chosen as the IEEE type-I rotating exciter. In order to ensure that the developed small signal stability program gives satisfactory results, eigenvalue analysis is performed for the Western System Coordinating Council (WSCC) 9-bus system (Fig. 1). This WSCC system comprises three generators and nine buses. Loads are connected at buses 5, 6 and 8 as shown in Fig. 1. At base case loading condition of the system, the generator 2 and 3 are supplying 163MW and 85MW power respectively. The base MVA is 100, and system frequency is 60 Hz.

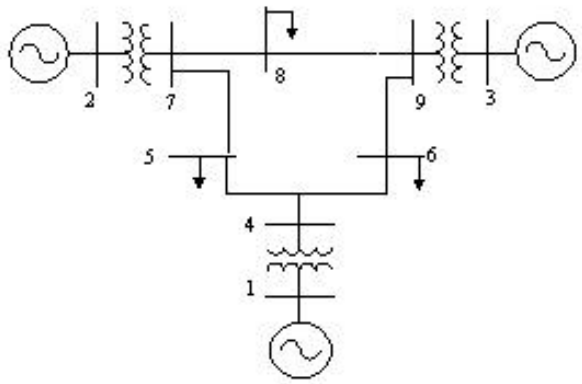

Figure 1: Three machine 9-bus system

Thyristor Controlled Series Capacitor (TCSC)

TCSC is one of the most important and best known FACTS devices, which has been in use for many years to increase the power transfer as well as to enhance system stability. The main circuit of a TCSC is shown in Figure 2. The TCSC consists of three main components: capacitor bank C, bypass inductor L and bidirectional thyristors SCR1 and SCR2. The firing angles of the thyristors are controlled to adjust the TCSC reactance in accordance with a system control algorithm, normally in response to some system parameter variations. According to the variation of the thyristor firing angle or conduction angle, this process can be modeled as a fast switch between corresponding reactance's offered to the power system.

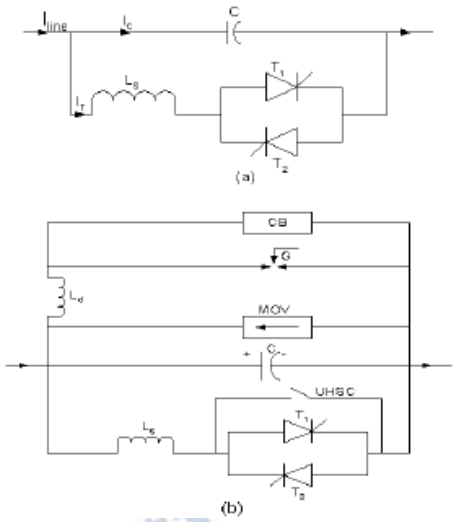

Figure 2: TCSC module (a) A basic module (b) a practical module

The structure of the TCSC is the same as that of a FC-TCR type SVC. The equivalent impedance of the TCSC can be modeled using the following equation

$$X_{TCSC} = X_c\,[1 - \frac{\kappa}{\kappa^2 - 1}\frac{\sigma + \sin\sigma}{\pi} + \frac{4\kappa^2\cos^2(\sigma/2)}{\pi(\kappa^2-1)^2}(\kappa\tan\frac{\kappa\sigma}{2} - \tan\frac{\sigma}{2})]$$

The TCSC can be continuously controlled in the capacitive or inductive zone by varying firing angle in a predetermined fashion thus avoiding steady state resonance region.

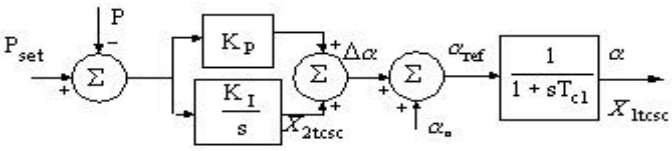

Figure 4: Block diagram of TCSC power controller

The line power is monitored and compared to desired power Pset. The error is fed to proportional-integral (PI) controller. The output of PI controller is fed through a first order block to get the desired α.

The controller equations are given as

$$X_{2TCSC} = \frac{K_I}{s}(P_{set} - P)$$

The signal wash out block is a high pass filter that prevents the steady changes in the speed by modifying the conduction angle. The value of washout time constant Tw should be high enough to allow signals associated with rotor oscillation to pass unchanged. Tw may be in the range of 1-20 sec. The phase lead compensator is used for the phase lag between the angular speed and the resulting electrical torque, so that the TCSC controller produces a component of electrical torque in phase with the rotor speed deviation. The gain of TCSC controller is chosen such that it provides satisfactory damping.

ModelingoftheSingle-Phase-SSSC

Figure 5 shows a functional model of the single-phase-SSSC.Its main components are; adc capacitor, a single-phase voltage-sourced converter (SPVSC), a low-pass (LP) filter and acoupling transformer.The origin of the ac voltage of the SPVSC comes from the dc voltageacross the dc capacitor, C_{dc}.The dc voltage is kept constant (the dc capacitor is maintainedcharged) at a reference value by rectified power from the ac transmission line (a small amount ofreal power is drawn to supply the low losses of the SPVSC).The SPVSC can be a simple single-square wave, a multi-pulse or a complex multi-level converter.The converter is operated by gate msignals generated by a gate pattern generator which is controlled by the controller.Thecontroller receives the local inputs such as line current and voltages and produces the appropriate control signal according to the desired reference values.The LP filter is used to filter out the harmonics in order to obtain the nearly-sinusoidal waveform from nonsinusoidal output of SPVSC. The coupling transformer is a step-up power transformer which is used to interconnect the SPVSC to the high voltage transmission line.

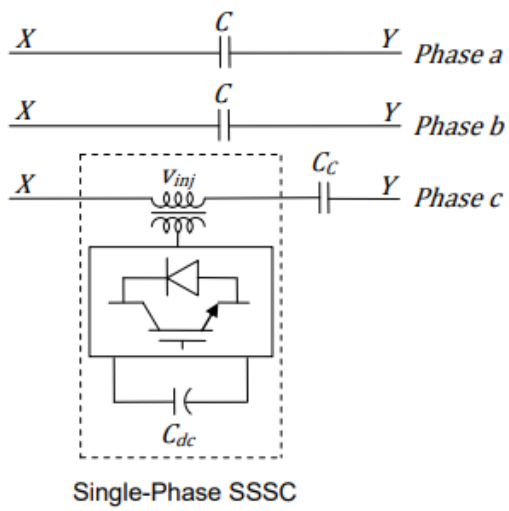

Figure5: Afunctionalmodelofthesingle-phase-SSSC

CASE STUDY:

After incorporating FACTS Controllers individually and in combination into DAE model of multi-machine system, voltage stability of 9-bus system is carried out at various loading conditions. However results are presented for maximum loading condition. At maximum loading condition, there is an SVC connected at bus 5 and TCSC is connected between buses 7 and 5. Figures shows the simulation result of the 9-bus system at maximum loading condition for four different cases - without any FACTS device, with an SVC connected at bus 5 and with a TCSC connected between buses (7-5) and combination of SVC-TCSC (The locations of SVC and TCSC are same as considered individually). The TCSC controller parameters are kept as KP =0.1 and KI =10 and the SVC controller parameters are chosen as KP =0.3 and KI =100. When SVCTCSC combination is used, the controller parameters are kept the same. However the system becomes stable when either SVC or TCSC or their combination are connected.

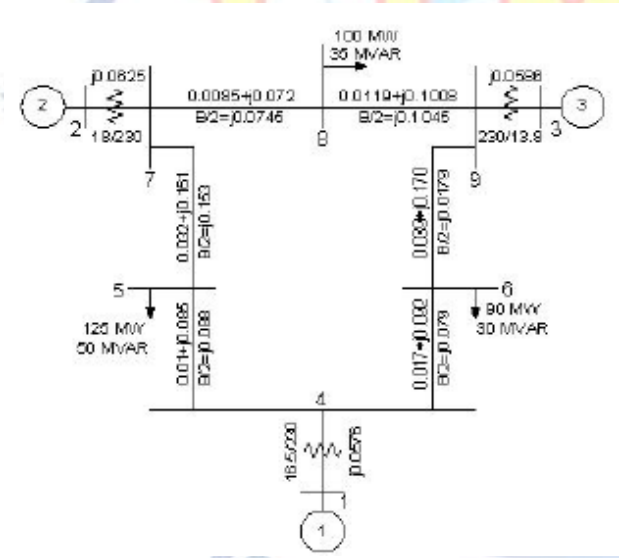

Figure 6: WSCC 3-machine, 9-bus system

The dynamic performance of SSSC is presented by real time voltage and current waveforms. Using MATLAB software the system shown in Fig. 7, has been obtained. In the simulation one SSSC has been utilized to control the power flow in the 500 KV transmission systems. Thus, the effective output impedance versus frequency characteristic of the SSSC remains that of a small inductor at all but its fundamental operating frequency. Consequently, the SSSC is unable to form a classical series resonant circuit with the inductive line impedance to initiate sub synchronous system oscillations. On the other hand, the SSSC has a very fast (almost instantaneous) response and thus it can be very effective in the damping of sub synchronous oscillations (which may be present due to existing series capacitors) if the electronic control is structured to provide this function. (In discussing dynamic interactions, it is of course true that the SSSC, like all actively controlled equipment, could under abnormal conditions exhibit instability or oscillatory interaction with the ac system if, for example, its closed-loop gains, providing automatic power flow control or other regulative functions, are improperly set, or if the electronic control itself malfunctions.

A.

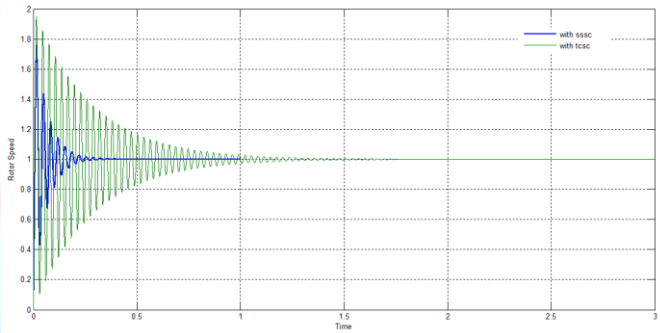

Figure 7: Simulation Result of Comparitive Analysis for Rotor Speed between SSSC and TCSC

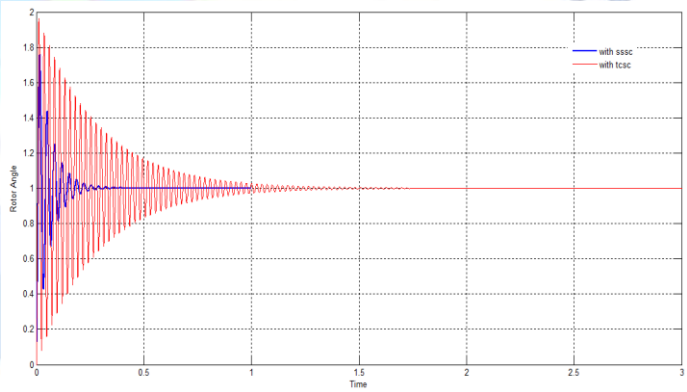

Figure 8: Simulation Result of Comparitive Analysis for Rotor Angle between SSSC and TCSC

CONCLUSION:

The power system stability enhancement of a two area power system by various FACTS devices is presented and discussed. The dynamics of the system is compared with and without the presence of UPFC in the system in the event of a major disturbance. Then the performance of the Series compensators for power

system stability improvement is compared with the other FACTS devices such as TCSC and SSSC respectively. It is clear from the simulation results that there is a considerable improvement in the system performance with the presence of PI based TCSC and SSSC for which the settling time in post fault period is found to be around 0.3 second.

REFERENCES

[1] R. Mihalic, P. Zunko and D. Povh, 1996, "Improvement of Transient Stability using Unified Power Flow Controller," IEEE Transactions on Power Delivery, 11(1), pp. 485-491.

[2] R. Padiyar, 2002, "Power System Dynamic Stability and Control," Second Edition, BS Publications, Hyderabad.

[3] Igor Papic, Peter Zunko, 2002, "Mathematical Model and Steady State Operational Characteristics of a Unified Power Flow Controller,"Electro-technical Review, Slovenija, 69(5), pp. 285-290.

[4] PrechanonKumkratug, 2009, "Application of UPFC to Increase Transient Stability of Inter-Area Power System," Journal of Computers, 4(4), pp. 283-287.

[5] PrechanonKumkratug, PanthepLaohachai, 2007, "Direct Method of Transient Stability Assessment of a Power System with a SSSC," Journal of Computers, 2(8), pp. 7782.

[6] S.V. Ravi Kumar, S. Siva Nagaraju, 2007, "Transient Stability Improvement using UPFC and SVC," ARPN Journal of Engineering and Applied Sciences, 2(3), pp. 3845.

[7] A. Kazemi, F. Mahamnia, 2008, "Improving of Transient Stability of Power Systems by Supplementary Controllers of UPFC using Different Fault Conditions," WSEAS Transactions on Power Systems, 3(7), pp. 547-556.

[8] S. Panda, Ramnarayan N. Patel, 2006, "Improving Power System Transient Stability with an off-centre Location of Shunt FACTS Devices," Journal of Electrical Engineering, 57(6), pp. 365-368.

[9] N.G. Hingorani, L. Gyugyi, 1999, "Understanding FACTS: Concepts and Technology of Flexible AC Transmission Systems," IEEE Press, New York.

[10] N. Mithulananthan, C.A. Canizares, J. Reeve, Graham J. Rogers, 2003, "Comparison of PSS, SVC and STATCOM Controllers for Damping Power System Oscillations," IEEE Transactions on Power Systems, 18(2), pp. 786-792.

[11] E.Z. Zhou, 1993, "Application of Static Var Compensators to Increase Power System damping," IEEE Transactions on Power Systems, 8(2), pp. 655-661.

[12] P. Mattavelli, G.C. Verghese, A.M. Stankovic, 1997, "Phasor Dynamics of Thyristor-Controlled Series Capacitor Systems," IEEE Transactions on Power Systems, 12(3), pp. 1259-1267.