Available online at: http://www.ijmtst.com/vol6issue03.html

International Journal for Modern Trends in Science and Technology

ISSN: 2455-3778 :: Volume: 06, Issue No: 03, March 2020

A Multi Level Soft Switching with AC SPARSE Modular using ANN

Chinnam Ajay Reddy[1] | Kotnala Sai Jhansi[1]| Pichika Durga Venkata Satya Sai Basavaraju[1]| Narni Vijaya Kumar[2]

[1]UG Students, Department of Electrical and Electronics Engineering, Godavari Institute of Engineering and Technology (A), Rajahmundry, Andhra Pradesh, India.

[2]Assistant Professor, Department of Electrical and Electronics Engineering, Godavari Institute of Engineering and Technology (A), Rajahmundry, Andhra Pradesh, India.

To Cite this Article

Chinnam Ajay Reddy, Kotnala Sai Jhansi, Pichika Durga Venkata Satya Sai Basavaraju and Narni Vijaya Kumar, "A Multi Level Soft Switching with AC SPARSE Modular using ANN", *International Journal for Modern Trends in Science and Technology*, Vol. 06, Issue 03, March 2020, pp.:65-69.

Article Info

Received on 12-February-2020, Revised on 22-February-2020, Accepted on 05-March-2020, Published on 08-March-2020.

ABSTRACT

A Multilevel AC-AC Sparse modular multilevel converter (SMMC) is proposed in this paper. It is a bi-directional multilevel converter and it is employed in high power and high voltage applications. It contains full bridge and half bridge SM's on the middle arm, and low frequency converters on each side of the converter. In this converter more number of IGBT switches can work under soft switching mode. Control scheme is also proposed in this paper, it is utilized to obtain the capacitor voltage balancing. Capacitor voltages have some oscillations, harmonics will be decreased by applying modified PWM technique. Number of levels of the converter increases, voltage harmonics will be decreased and also switching frequency of the full bridge and half bridge arm IGBTs is decrease. The appropriateness of the multilevel level AC/AC SMMC with ANN Control scheme will be estimated by utilizing the MATLAB/SIMULINK software.

KEYWORDS: *SMMC, multilevel inverter, ANN*

I. INTRODUCTION

Now a days, multilevel converters have broad range of applications in many industrial applications such as FACTS devices, HVDC lines and renewable energy resource interfaces [1] – [3]. Multilevel converters can be categarised into three types. Those are diode clamped converter(DCC), Flying capacitor converter(FCC) and Cascaded H-bridge converter(HBC). If number of levels of the converter increases, there should be a complexity in capacitor voltage adjusting in DCC, FCC requires more number of capacitor and cascaded H- bridge converter requires more number of individual dc sources [5] - [6]. To overcome such limitations of the converters, modular multilevel converter (MMC) is proposed in 2003. MMC contains low voltage switches and offering the low harmonic distortions. Now a days, MMC [7] – [9] based HVDC systems are used for transmitting the power up to GW range. MMC is also have some drawbacks, i.e more number of IGBT switches can operate under hard switching mode and circulating current is also more. To overcome such limitations of MMC, a new bi-directional converter, i.e sparse

modular multilevel Converter(SMMC) is proposed [10].

SMMC contains fewer number of components than compared with the other types of converter topologies. In this multilevel converter more number of IGBT switches can work under soft switching mode. In this proposed converter, by inserting the third harmonic frequencies the capacitor voltage gets balanced. FFT analysis for 5-level SMMC as shown in fig.1. It gives the value for total harmonic distortion (THD). To reduce the THD value, levels of the converter has to be increased.

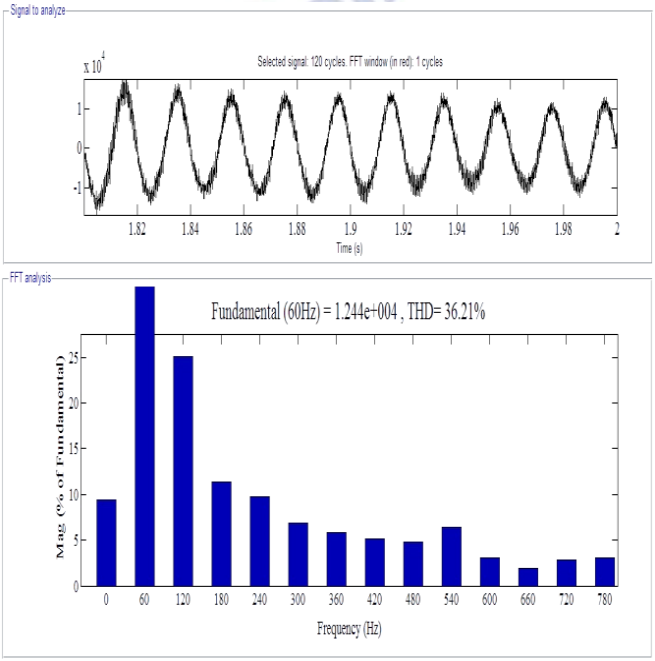

Fig.1 FFT analysis for 5-level SMMC

II. MULTILEVEL AC-AC SMMC

Modular multilevel converter (MMC) is proposed in 2003 to overcome such limitations by utilizing low voltage switches and offering low harmonic distortion. Currently, MMC-based HVDC systems are offered for power transmission up to GW ranges. Modular multilevel matrix converter is first introduced in 2001 and then further got developed for motor drive applications. High number of hard-switched semiconductors and undesired circulating currents are the drawbacks of MMC and modular multilevel matrix converter which are considerably improved in Sparse Modular Multilevel Converter (SMMC). In this paper, a control strategy based on third-harmonic injection is proposed for SMMC to guarantee the capacitor voltage balancing in different operational conditions. In addition, a modified unfolder is suggested to eliminate the inherent zero-crossing circulating current.

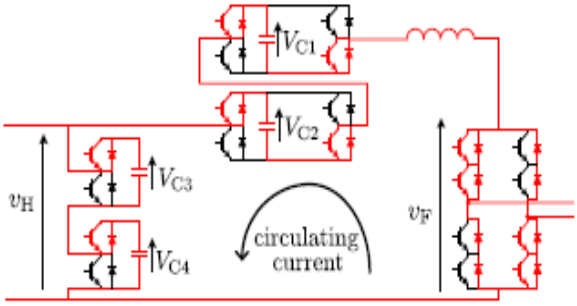

Fig.2. Zero-crossing circulating current in a 5-level SMMC.

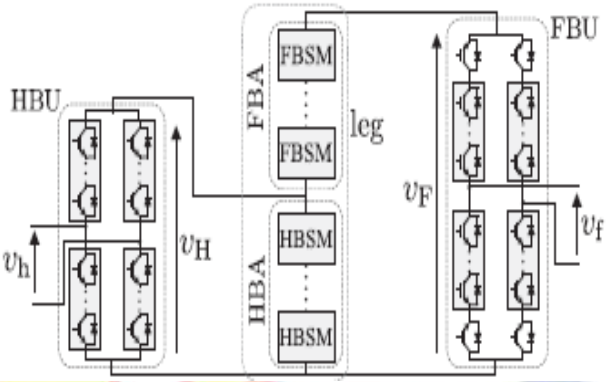

Fig.3. Schematic diagram of a modified single-phase SMMC.

The SMMC consists of two low frequency unfolders on the sides and one leg containing a number of cascaded full-bridge (FBSM) and half bridge sub modules (HBSM). By inserting proper number of SMs in the upper and lower arms, the desired voltage on both sides of the converter can be achieved. Unlike MMC, there is no circulating current between different legs (phases) of SMMC, as they are isolated from each other by a 3-phase transformer. However, it is inherently possible for current to circulate inside one phase of the SMMC. This current is not continuous and may only flow when v_F crosses zero, and so it is called zero-crossing circulating current. For example, in Fig. 2, if $V_{C3} + V_{C4}$ is slightly smaller than $V_{C1} + V_{C2}$, it causes v_F to become a small negative value (when $v_F = 0$ is required). In addition, due to switching transients, the SM insertion/bypassing may not occur simultaneously. This leads to one extra level decrease/increase in v_F for a short period of time. An extra level decrease in v_F (when $v_F = 0$ is required), could make v_F negative. This negative voltage turns on the unfolder's anti-parallel diodes and current circulates through the leg. The arm inductor is installed to limit this current.

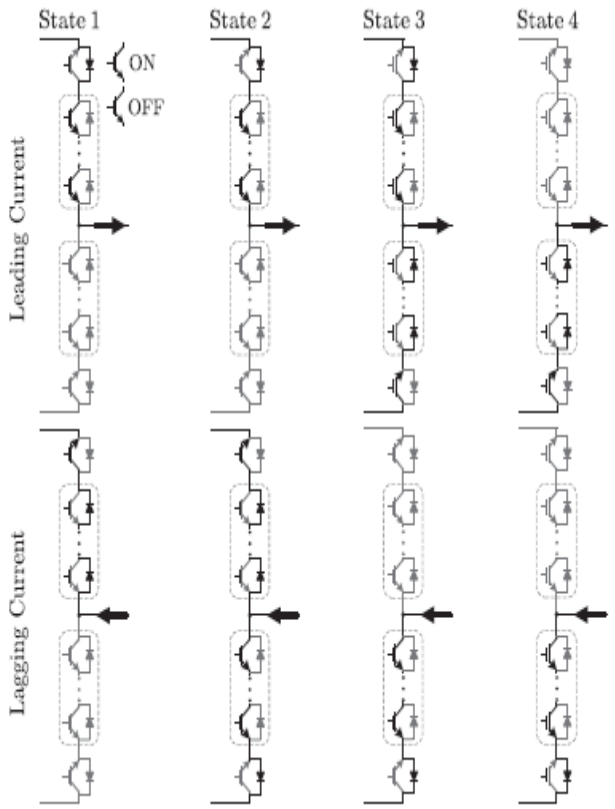

Fig.4. Description of zero-crossing transition in FBU.

Two major factors in determining the cost of arm inductor are its inductance [26] and its nominal current. This inductor is on the path of the entire transferred power, thus it must be able to continuously withstand the total current without saturation which makes it a big passive component almost as comparable to the AC-filter inductor. Adding one reversed IGBT in each arm of the FB-side Unfolder (FBU) could block the possible small negative υF as shown in Fig. 3 and obviates the necessity of the arm inductor. The HB-side unfolder (HBU) remains intact. It should be noticed that the maximum voltage-drop across the reversed IGBT occurs, when half-bridge arm (HBA) and full-bridge arm (FBA) capacitors are in their lowest and highest acceptable voltages, respectively. Therefore, this IGBT must withstand the predefined capacitor voltage ripple, ΔVripp multiplied by the number of HBSMs (or FBSMs) which equals to $(n - 1)/2 \times \Delta V$ripp. This implies that in case of high number of levels, more than one reversed IGBT might be required. The additional IGBT is part of the unfolder arm which is a string of series-connected semiconductor devices. This requires both transient and steady-state voltage sharing among the devices. The unfolders operate in zero-voltage switching (ZVS) mode, thus transient voltage sharing is always satisfied [26]. In the off-state, steady-state voltage sharing is achieved by installing high-value parallel resistors. The additional IGBT must be equipped with the same resistor. Fig. 4 demonstrates FBU's principle of operation at voltage zero-crossing transition for both leading and lagging currents. It can be seen that at any stage of transition, there is at least one reversed IGBT blocking the zerocrossing circulating current. The 3-phase SMMC is constructed using a 3-phase transformer as shown in Fig.

III. SIMULATION RESULTS

Fig. 5 shows that Simulink diagram of three phase Multilevel level SMMC. In this, Grid A operated at 50 HZ frequency and Grid B operated at 60 HZ frequency. Fig. 6 shows that Simulink diagram of subsystem that is single phase multi level SMMC.

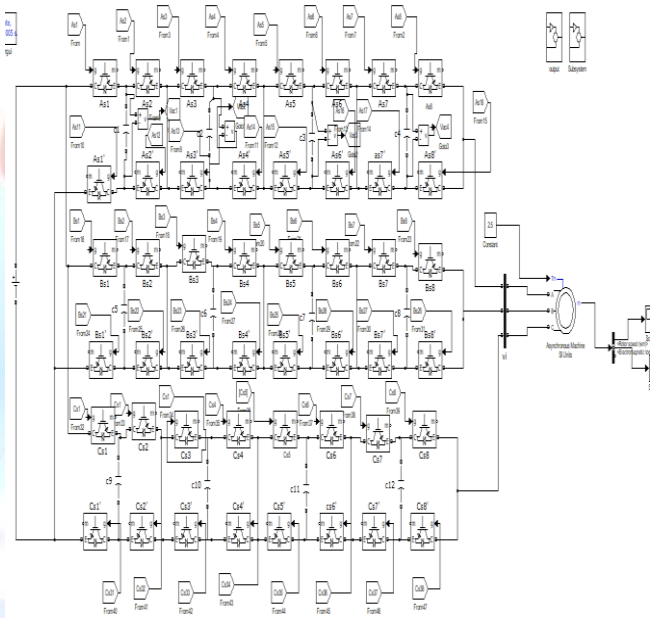

Fig.5. Simulation circuit.

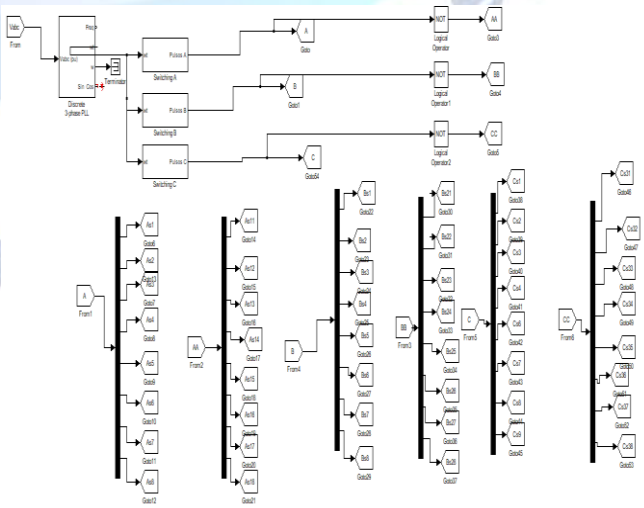

Fig.6. Controller circuit.

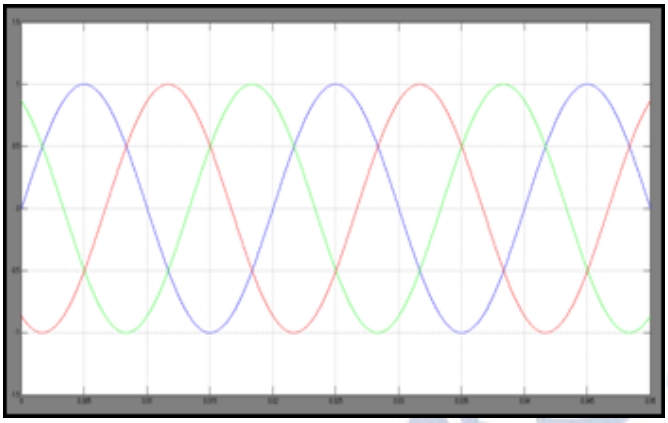

Fig.7. Output currents.

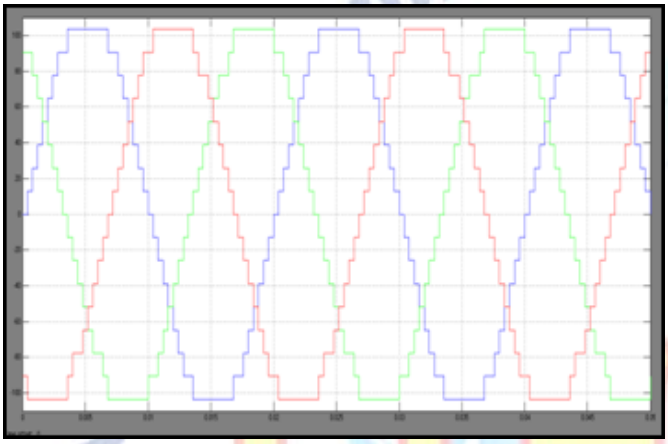

Fig.8. Output voltages with Multilevel.

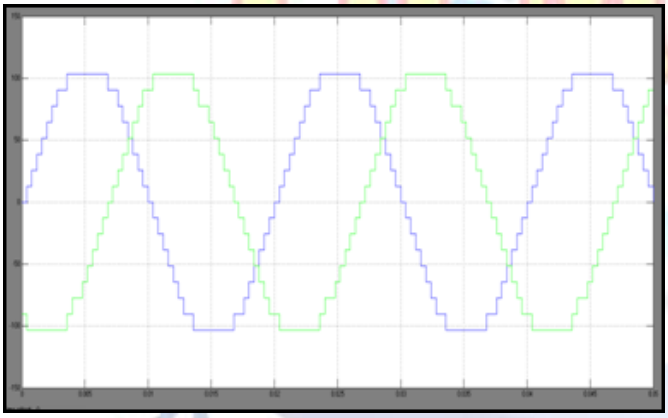

Fig.9. Two difference Voltages output

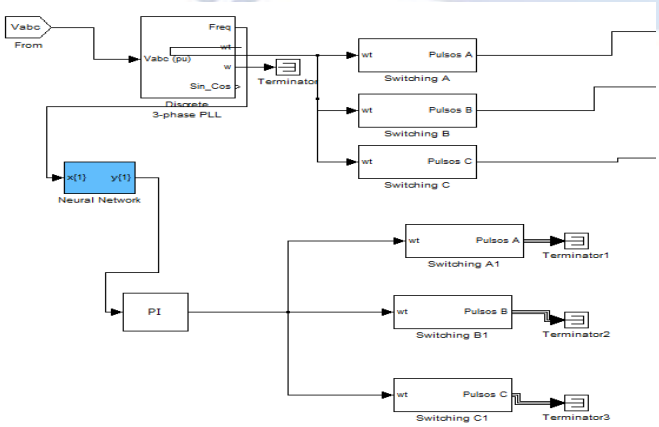

Fig.10. Controller circuit with ANN controller.

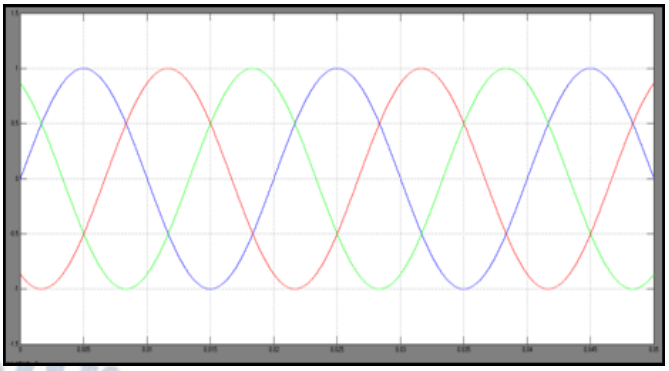

Fig.11 Output currents.

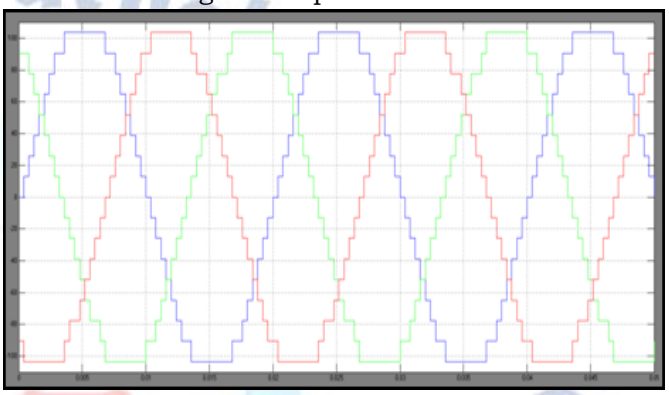

Fig.12 Output voltage with multi level.

IV. CONCLUSION

In this paper, multi level AC - AC SMMC with ANN controller is proposed and control scheme with modified PWM technique is also discussed. In this converters more number of IGBT switches can operate under soft switching mode. So, losses in the converter is less. Hence efficiency of the converter has to be increased. By applying modified PWM technique to the converter, the oscillations and harmonics of the capacitor voltage waveform is reduced. From FFT analysis of 5-level and 7-level SMMC we can conclude that, number of levels of the converter increases THD will be reduced. The Simulation results attained from the MATLAB software shows the appropriateness of the multilevel – level AC-AC SMMC.

REFERENCES

[1] M. Liserre, T. Sauter, and J. Y. Hung, "Future energy systems: Integrating renewable energy sources into the smart power grid through industrial electronics," IEEE Ind. Electron. Mag., vol. 4, no. 1, pp. 18–37, Mar. 2010.

[2] M. Yilmaz and P. T. Krein, "Review of battery charger topologies, charging power levels, and infrastructure for plug-in electric and hybrid vehicles," IEEE Trans. Power Electron., vol. 28, no. 5, pp. 2151–2169, May 2013.

[3] A. Javadi, A. Ndtoungou, H. F. Blanchette, and K. Al-Haddad, "Power quality device for future household systems with fast electric vehicle charging station," in Proc. IEEE Veh. Power Propul. Conf. (VPPC), Montreal, QC, Canada, 2015, pp. 1–6.

[4] J. M. Guerrero, P. C. Loh, T.-L. Lee, and M. Chandorkar, "Advanced control architectures for intelligent

microgrids—Part II: Power quality, energy storage, and AC/DC microgrids," IEEE Trans. Ind. Electron., vol. 60, no. 4, pp. 1263–1270, Apr. 2013.

[5] S. Zhikang et al., "Series and parallel resonance problem of wideband frequency harmonic and its elimination strategy," IEEE Trans. Power Electron., vol. 29, no. 4, pp. 1941–1952, Apr. 2014.

[6] H. Akagi and K. Isozaki, "A hybrid active filter for a three-phase 12-pulse diode rectifier used as the front end of a medium-voltage motor drive," IEEE Trans. Power Electron., vol. 27, no. 1, pp. 69–77, Jan. 2012.

[7] A. Javadi and K. Al-Haddad, "A single-phase active device for power quality improvement of electrified transportation," IEEE Trans. Ind. Electron., vol. 62, no. 5, pp. 3033–3041, May 2015.

[8] C. A. G. Marques, M. V. Ribeiro, C. A. Duque, P. F. Ribeiro, and E. A. B. Da Silva, "A controlled filtering method for estimating harmonics of off-nominal frequencies," IEEE Trans. Smart Grid, vol. 3, no. 1, pp. 38–49, Mar. 2012.

[9] K. Rahbar, J. Xu, and R. Zhang, "Real-time energy storage management for renewable integration in microgrid: An off-line optimization approach," IEEE Trans. Smart Grid, vol. 6, no. 1, pp. 124–134, Jan. 2015.

[10] E. C. D. Santos, J. H. G. Muniz, E. R. C. Da Silva, and C. B. Jacobina, "Nested multilevel topologies," IEEE Trans. Power Electron., vol. 30, no. 8, pp. 4058–4068, Aug. 2015.

[11] Q. Guo, S. Xin, H. Sun, Z. Li, and B. Zhang, "Rapid-Charging navigation of electric vehicles based on real-time power systems and traffic data," IEEE Trans. Smart Grid, vol. 5, no. 4, pp. 1969–1979, Jul. 2014.

[12] A. Javadi, A. Hamadi, L. Woodward, and K. Al-Haddad, "Experimental investigation on a hybrid series active power compensator to improve power quality of typical households," IEEE Trans. Ind. Electron., vol. 63, no. 8, pp. 4849–4859, Aug. 2016.

[13] A. Javadi, A. Hamadi, and K. Al-Haddad, "Three-phase power quality device for weak systems based on SRF and p-q theory controller," in Proc. 41st Annu Conf. IEEE Ind. Electron. Soc. (IECON), Yokohama, Japan, 2015, pp. 345–350.

[14] S. Rivera, B. Wu, S. Kouro, V. Yaramasu, and J. Wang, "Electric vehicle charging station using a neutral point clamped converter with bipolar DC bus," IEEE Trans. Ind. Electron., vol. 62, no. 4, pp. 1999–2009, Apr. 2015.

[15] Y. Wang, X. Lin, and M. Pedram, "Adaptive control for energy storage systems in households with photovoltaic modules," IEEE Trans. Smart Grid, vol. 5, no. 2, pp. 992–1001, Mar. 2014.

[16] A. Kuperman, U. Levy, J. Goren, A. Zafransky, and A. Savernin, "Battery charger for electric vehicle traction battery switch station," IEEE Trans. Ind. Electron., vol. 60, no. 12, pp. 5391–5399, Dec. 2013.

[17] M. Lin et al., "A new PWM strategy for grid-connected half-bridge active NPC converters with losses distribution balancing mechanism," IEEE Trans. Power Electron., vol. 30, no. 9, pp. 5331–5340, Sep. 2015.