Available online at: http://www.ijmtst.com/vol5issue09.html

International Journal for Modern Trends in Science and Technology

ISSN: 2455-3778 :: Volume: 05, Issue No: 09, September 2019

Low Cost FMCW Altimeter Radar

Aditya Mallareddypeta[1] | Kedar Cheekoty[2] | Sandeep Reddy Surakanti[3]

[1]Associate Software Engineer,Capgemini, Hyderabad, Telangana, India
[2]Pre-Silicon Validaion Engineer, Intel Technologies Pvt. Ltd., Hyderabad, Telangana, India.
[3]Electrical Engineering, University of South Florida, Tampa, FL, USA.

To Cite this Article
Aditya Mallareddypeta, Kedar Cheekoty and Sandeep Reddy Surakanti, "Low Cost FMCW Altimeter Radar", *International Journal for Modern Trends in Science and Technology*, Vol. 05, Issue 09, September 2019, pp.-01-05.

Article Info
Received on 16-July-2019, Revised on 23-August-2019, Accepted on 27-August-2019, Published on 30-August-2019.

ABSTRACT

This paper provides a low cost single antenna FMCW radar for the application of the altimeter. The system design and subsection specifications are provided in details, the system is designed at L band using VCO as the signal generator and a directional coupler to be replaced with a circulator to separate the transmitted signal from the received signal. The system used a highly low power ADC to increase the dynamic range. The system is designed for the range resolution of 50 m and the unambiguous range is 500 meters.

KEYWORDS: *FMCW Radar, Chirp Signal, Directional Coupler, Monopole Antenna.*

I. INTRODUCTION

Altimeter radar is a type of radar used to measure the height of the radar from the ground. Radar is accomplished via sending an electromagnetic wave and receiving its reflections from the objects and determining the objects specifics specially its range, and direction, and etc. The RADAR can be categorized based on their waveforms as pulse radar, Frequency Modulated Continuous Wave (FMCW), Step Frequency Continuous Wave (SFCW) and noise radar. Based on the application and cost and restrictions, the best type of the radar can be used [1].

Recently, radar finds application in civil such as non-destructive inspection and medicine. In [2], an SFCW radar is used to detect and localize the location of defects in gas pipeline and in [3], the radar system is used for detecting breast cancer.
FMCW radar can be the simplest and low-cost radar which is able to detect and localize the targets by sending a chirp signal and mixing the it with the received signal. One of elements which can be used in designing radar is mixer. Recently, many kinds of mixers have been designed for different types of applications like low or high power consumption [4]. For lower power consumption, it has been design through current-mode circuits and multiplying the input signals with squarer cells for lower frequencies [5]. The first type of radar altimeter, developed in 1938 which used for civil aircraft [6]. In 1940s, the Synthetic Aperture Radar was introduced by the United States. This type of radar increases the resolution of the acquisitions by creating a synthetic aperture form the movement of the radar over the landscape. Later on tomographic methods were developed [7] and improved [8] to create three dimensional models. FMCW systems for distance measurements are frequently used for tank level probing radar (TLPR), car collision radar, light detection and ranging (LIDAR) and a radar altimeter [9]. All the FMCW radars suffer from the isolation of transmitter and receiver. The isolation

between the TX and RX should be sufficient to overcome the phase noise of the VCO. In order to increase the isolation between the TX channel and the RX channel, two antenna radar is suggested in [10]. However, for the application that we need low cost and the system is restricted by the space size, the two channel FMCW is not suitable. Another way to overcome the antenna isolation is using signal processing method. In [11], an FMCW multiple-input multiple-output (MIMO) phased array radar system is used to detect and localize targets from behind a concrete wall. Another restriction is the dynamic range of the radar transceiver in the IF level. This restriction can be overcome by using VCO ADCs which bringing about low noise floor and high dynamic range [12,13].

In this paper, a single antenna FMCW radar is designed based on using directional coupler. The directional couple is able to provide an isolation less than 40 dB in narrow bandwidth. the narrow bandwidth allows the system to has a highly dynamic range with the expense of decreasing the range resolution.

The paper is organized as follows. In section I, the system design is explained. Section II provides the link budget and section III is the simulation results and section IV conclude the paper.

II. System Design

In order to design an FMCW radar, at first according the range resolution and the unambiguous range and the RCS of the target, based on the radar equation, the unknown parameters such as the operational frequency, the signal waveform, etc., are determined. Designing an FMCW radar can be summarized to find the following parameters:

- ☐ Operational carrier Frequency.
- ☐ Period of the Modulated signal.
- ☐ Bandwidth of the modulated signal.
- ☐ Sampling frequency of ADC.
- ☐ Receiver design (minimum gain of receiver).
- ☐ Beat note signal processing.

Selecting the carrier operational Frequency

The main parameters which are very affective in choosing the operational frequency are as follows Antenna size, System cost, FCC limitation and Atmospheric loss. The first and most important parameter for selecting the carrier operational frequency band is the antenna size (and isolation between the TX and RX). For special application like Ground Penetrating RADAR or through the wall radar, the loss of the ground and loss of the wall are in priority to select the carrier operational frequency which the atmospheric loss is shown in Fig.1. In other words, a trade of between the challenge of the antenna and the loss of the wall or ground and the power of the transmitter take part in choosing the carrier frequency. Another parameter for selecting the carrier frequency is the cost of the system. For example, if we want to have inexpensive system, it is better to work at low frequency or at the frequencies which un-expensive TX/RX chips are available. If the system is a civil system, we should work at the unallocated frequency bands.

.

Modulation Function

The next parameter in FMCW is the modulation function. The common modulation function is saw-tooth (Symmetric or Asymmetric) as shown in Fig.2. The modulation function in the form of asymmetric saw tooth like Fig.2.c is very common. For choosing the modulation function period T_m at first the maximum delay time (τ_{max}) due to the unambiguous range is $\tau_{max} = C_0/2R_{max}$ where C_0 is the speed of light, R_{max} is the unambiguous range, is calculated and then $\tau_{max} \ll T_m$. Also, the modulation function period must be equal or larger than two times of maximum Doppler frequency, that is, $T_m \gg 2f_{d,max}$ where $f_{d,max}$ is the maximum doppler frequency. The bandwidth of the modulation signal bandwidth (Δf) is selected according to the range resolution $\Delta R = \frac{C_0}{2\Delta f}$. By determining the Δf and T_m, the beatnote frequency can be calculated as

$$f_{beat,\max} = \frac{\Delta f}{T_m}\tau_{\max} \quad (1)$$

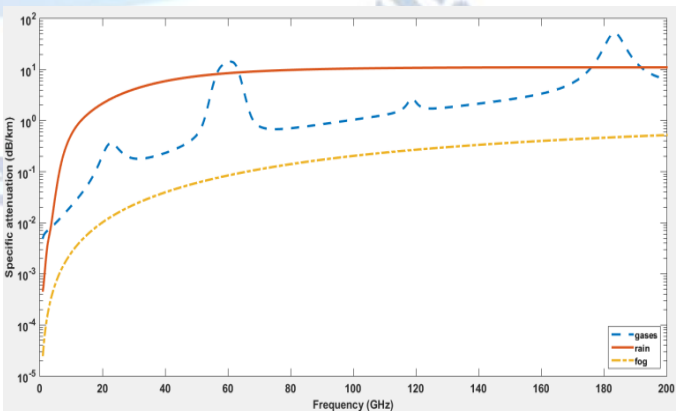

Fig. 1. Atmospheric Loss vs frequency.

A. Sampling frequency of ADC

According to the Nyquist theory, the least sampling frequency is $f_s \geq 2f_{beat,max}$. The SNR of the card is calculated as:

$$SNR_{card} = 6.2N_{bit} + 1.7dB \quad (2)$$

The resolution bandwidth is as:

$$SNR_{card} = \frac{f_s}{NFFT} \quad (3)$$

For the radio transceivers, the system dynamic range is always restrained with the noise floor. To increase the receivers dynamic range, the first step is amplifying the received signal at the first block of receiver. Another parameter for increasing the system dynamic range is using highly Spur Free Dynamic Range (SFDR) ADC in the IF level. Recently, VCO ADCs have provided high dynamic ranges and SNDRs. [14,15] achieved high dynamic range of 47dB and 62dB with the resolution of around 11 bits, which has made VCO-based ADC very suitable for the radio transceivers, as the noise floor is low.

B. Receiver Design

The next station is designing the receiver. The receiver should be designed so that the receiver's noise floor dominant the card's (ADC) noise floor. The unknown parameter of the receiver is its minimum gain. the noise floor of the receiver is

$$SNR_0 = -174 + N_F + 10 \times \log_{10} RBW + G_r \quad (4)$$

Therefore, in order to that the noise floor of the receiver be the dominant that noise figure of the card.

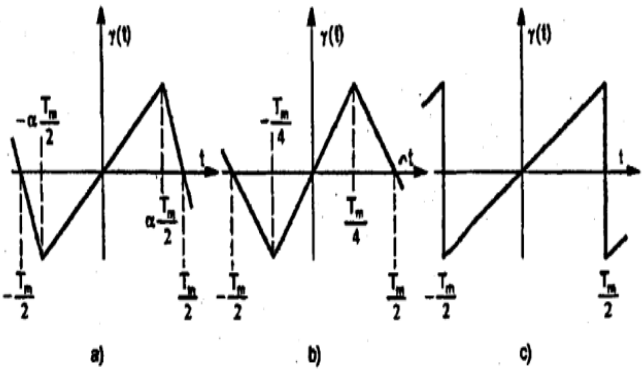

Fig. 2. Modulation functions with linear modulation.

C. Calculating the loss of ground

The requirement is to design an FMCW radar altimeter mounted on an airplane for determining the altitudes between 60 m and 600 m. the range resolution is 60 m.

The first step in designing an FMCW radar altimeter is calculating the radar equation. The scenario of FMCW radar altimeter can be model as a point to point radar with a blockage between the TX and RX as shown in Fig.3. According to the image theory in electromagnetic, the ground acts as a lossy PEC, therefore, the radar equation can be model very simply as

$$P_t = \frac{P_t G^2 \lambda^2}{(4\pi)^3 R^4 L} \quad (5)$$

where P_t is the transmitted power, G is the antenna gain, λ is the wavelength of the carrier, R is the distance of the radar altitude and L is the loss of the ground.

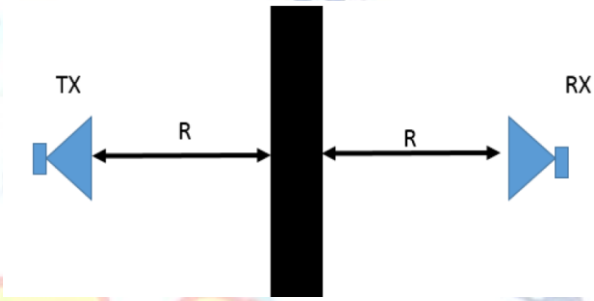

Fig. 3. altimeter radar equivalence model.

A. Calculating the RCS of the ground

Clutter is the term used by radar engineers to denote unwanted echoes from the natural environments. Clutter include echoes from land, sea, weather, birds, and so on. Echoes from sea and lands are called surface clutter. The magnitude from the echo from the surface clutter is proportional to the area illuminated. In order to have measure of the clutter that is independent of the illuminated area, the clutter cross section per unit area is defined which denoted by the symbol σ_0. It is given as $\sigma_0 = \frac{\sigma_c}{A_c}$ where σ_c is the radar cross section of the clutter occupying the area A_c. The parameter σ_0 is a function of the grazing angle. the parameter σ_0 is measured for different surface clutter as shown in Fig.4. The mathematical model of the σ_0 is:

$$\sigma_0(\psi) = \delta \sin(\psi) + Ae^{B(90-(\psi))} \quad (6)$$

where δ, A and B are depending to the roughness of the clutter. A and B roughly have the values 10 and 0.2 respectively. The parameter δ has the value between 10^{-4} and $10^{-1.5}$ for sea and for roads.

In order to calculate the return power from the surface, we need to know two parameters as σ_0 and the area the ground which is lighten by the antenna's beam given as A_c. So, in the ensuing line we will explain how to calculate A_c. As shown in

Fig.5, the illuminated area is $A_i = R\theta_B\left(\frac{c\tau}{2}\right)\sec(\psi)$ where θ_B is the two-way azimuth angle, c is the speed of light in free space, τ is the pulse width and ψ is the grazing angle.

B. FMCW Subsystem

In this part of the paper, at first, we show a big picture of the practical altimeter and then we get down to the nitty-gritties of each subsystem.

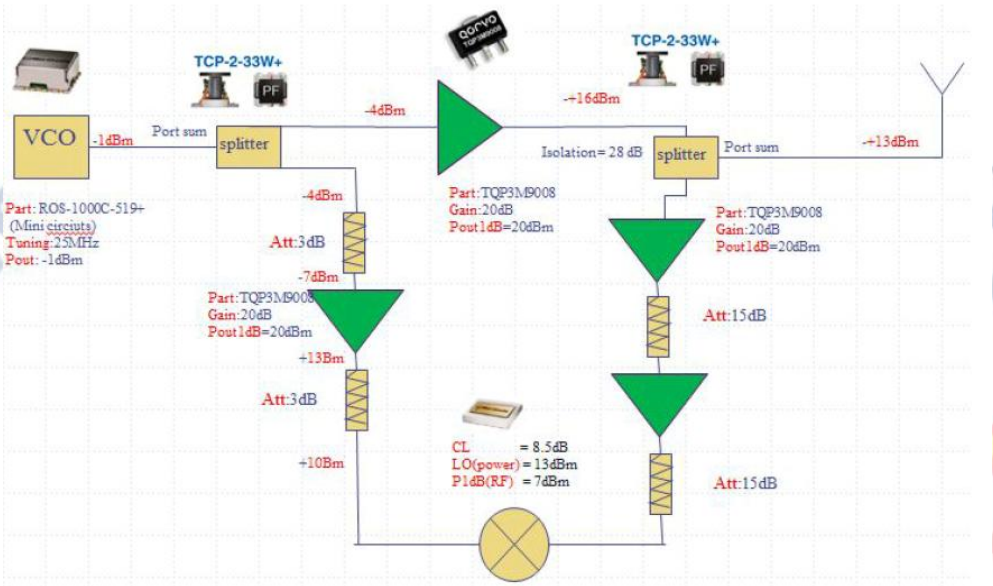

Fig. 6. RF circuit of TX and RX.

In order to design such system, at first, we simulate an FMCW radar using MATLAB software. The main limitation of such a system is the limited area of the antenna. So, the practical FMCW design challenges are as follows.

1. Transmit and receive antenna coupling.
   - ☐ Limits the sensitivity and dynamic range.
   - ☐ Cause a false target beatnote.
   - ☐ May require delay lines in the system.
2. Producing linear FM chirp.
   - ☐ Poor chirp linearity causes degradation in range.
   - ☐ Resolution and unambiguous range.
3. Data acquisition and signal processing.
   - ☐ Digitizing the IF signal.
   - ☐ Multiple targets detection.

The first question that comes to mind is that weather use a single antenna system or double? Since we have a limitation of the antenna space, we can either switched at low frequency while using single antenna system, or we can make use of two antenna system with high operational frequency. In order to implement such system with limited antenna space, we used a two-antenna system while working at high frequency. Here we bring up a comparison of single antenna with double antenna system. Since there is a small space for the antennas and achieving an agreeable isolation demands to switch to high frequency, (where the higher frequency, the higher pass loss), so we decided to implement single antenna system at low frequency. It is worth noting that in a single antenna system, each subsystem needs to work ideally and as perfect as they can.

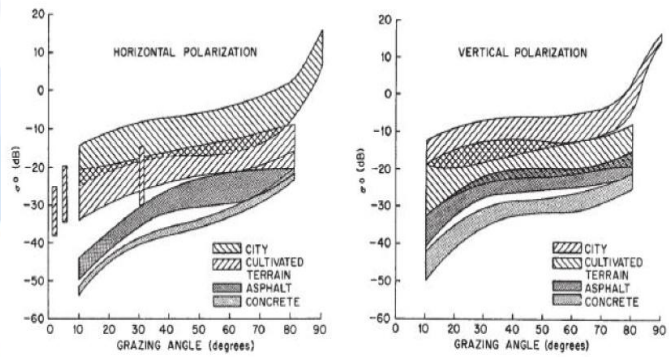

Fig. 4. the measured value of σ_0 for the vertical and horizontal polarization.

A. RF circuit

In this subsection, the RF circuits of transmitter and the receiver is described. As shown in Fig.11, the VCO generate a chirp signal and a sample of the transmitted signal used to derive the LO of the mixer.

III. Conclusion

This paper presented a low-cost single antenna FMCW Radar for the application of altimeter. The system design and subsystem specification are explained. In addition, the reflection of the transmitted signal from the ground is calculated and is modeled. To this end, the ground can be modeled as a mirror and the radar equation is similar to one directional transmission. The radar benefits from a single VCO and a directional coupler to reduce the cost of the radar.

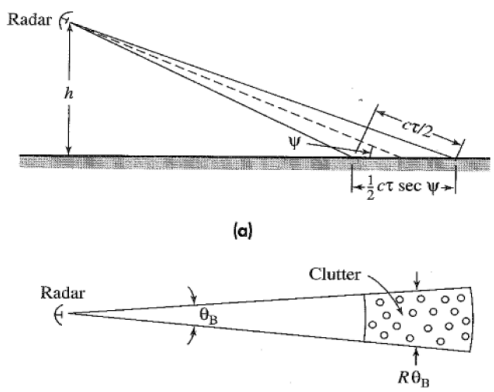

Fig. 5. Geometry of radar surface clutter. (a) Elevation view showing the extend of the surface illuminated by the radar pulse. (b) plan view showing the illuminated clutter patch.

References

[1] R. B. Mahafza, "*Radar systems analysis and design using MATLAB*", Chapman and Hall/CRC.

[2] J. Ebrahimi-Zadeh, M. Dehmollaian, K. Mohammadpour-Aghdam, "Electromagnetic time-reversal imaging of pinholes in pipes", *IEEE Transactions on Antennas and Propagation*, Vol. 64, No. 4, pp. 1356-1363, 2016.

[3] P. M. Meaney, Fanning, M. W., Li, D., Poplack, S. P., & Paulsen, K. D, "A clinical prototype for active microwave imaging of the breast," *IEEE Transactions on Microwave Theory and Techniques*, Vol. 48, No. 11, pp. 1841-1853, 2000.

[4] T. Nguyen, K. Fujii, A-V. Pham, "Highly Linear Distributed Mixer in 0.25-µm Enhancement-Mode GaAs pHEMT Technology," IEEE Microwave and Wireless Components Letters, Vol. 27, No. 12, 2017.

[5] S. A. Khoshnevis, F. Shahabi, R. G. Talkhouncheh," Four-Quadrant Weak Inversion Analog Multiplier in the 180nm Technology for Biomedical Applications," Journal of Soft Computing and Decision Support Systems, Vol. 6, No. 5, 2019.

[6] J. L. Campbell, M. U. De Haag, "Assessment of radar altimeter performance when used for integrity monitoring in a synthetic vision system," *20th DASC. 20th Digital Avionics Systems Conference (Cat. No. 01CH37219)*, 2001.

[7] G. Fornaro, F. Lombardini and F. Serafino, "Three-dimensional multipass SAR focusing: Experiments with long-term spaceborne data,"*IEEE Transactions on Geoscience and Remote Sensing*, vol. 43, no. 4, p. 702–714, 2005.

[8] S. A. Khoshnevis, S. Ghorshi," Enhancement of the {Tomo-SAR} Images Based on Compressive Sensing Method," 6th International Conference on Space Science and Communication IEEE, 2019.

[9] J. H. Choi, J. H. Jang, J. E. Roh, "Design of an FMCW radar altimeter for wide-range and low measurement error," *IEEE Transactions on Instrumentation and Measurement*, Vol. 64, No. 12, pp. 3517-3525, 2015.

[10] M. Wahab, Y. P. Saputera, Y. Wahyu, A. Munir, "Isolation improvement for x-band FMCW radar transmit and receive antennas," *International Conference on Radar, Antenna, Microwave, Electronics, and Telecommunications (ICRAMET)*, pp. 110-114, 2016

[11] T. S. Ralston, G. L. Charvat, J. E. Peabody, "Real-time through-wall imaging using an ultrawideband multiple-input multiple-output (MIMO) phased array radar system," *IEEE international symposium on phased array systems and technology*, pp. 551-558, 2010.

[12] M. Danesh, ST, Chandrasekaran, A. Sanyal, "Ring Oscillator Based Delta-Sigma ADCs," IEEE International Conference on Electronics, Circuits and Systems (ICECS), 2018.

[13] M. Karama, K. El-Sankary, Y. Fouzar, "Design of an FMCW radar altimeter for wide-range and low measurement error," *IEEE Transactions on Circuits and Systems II: Express Briefs*, Vol. 66, No. 7, pp. 1089-1093.

[14] V. Nguyen, F. Schembari, R. B. Staszewski, "A 0.2-V 30-MS/s 11b-ENOB Open-Loop VCO-Based ADC in 28-nm CMOS," IEEE Solid-State Circuits Letters, Vol. 1, No. 9, 2018.

[15] M. Danesh, A. Jayaraj, ST. Chandraseskaran, A. Sanyal, "0.43nJ, 0.48pJ/step Second-Order ΔΣ Current-to-Digital Converter for IoT Applications," IEEE International Symposium on Circuits and Systems (ISCAS), 2019.