Available online at: http://www.ijmtst.com/vol5issue05.html

International Journal for Modern Trends in Science and Technology

ISSN: 2455-3778 :: Volume: 05, Issue No: 05, May 2019

Efficient Control Strategies for Compensation of Voltage in Unbalanced Grid Connected Distributed Generation

T.Tulasi[1]| G.Sailaja[2]| V.S.Aditya[3]| Ch.Vishnu Chakravarthi[4]

[1]PG Student,. Department of Electrical and Electronics Engineering, Sanketika Institute of Technology and Management, Visakhapatnam, Andhra Pradesh, India

[2]Assistant Professor, Department of Electrical and Electronics Engineering, Sanketika Institute of Technology and Management, Visakhapatnam, Andhra Pradesh, India

[3]Assistant Professor and PG Co-ordinator, Department of Electrical and Electronics Engineering, Sanketika Institute of Technology and Management, Visakhapatnam, Andhra Pradesh, India

[4]Head, Department of Electrical and Electronics Engineering, Sanketika Institute of Technology and Management, Visakhapatnam, Andhra Pradesh, India

To Cite this Article

T.Tulasi, G.Sailaja, V.S.Aditya and Ch.Vishnu Chakravarthi, "Efficient Control Strategies for Compensation of Voltage in Unbalanced Grid Connected Distributed Generation", *International Journal for Modern Trends in Science and Technology*, Vol. 05, Issue 05, May 2019, pp.-32-37.

Article Info

Received on 17-April-2019, Revised on 15-May-2019, Accepted on 18-May-2019.

ABSTRACT

Due to the wide spread of power electronics equipment in modern electrical systems, the increase of the harmonics disturbance in the ac mains currents has became a major concern due to the adverse effects on all equipment. Power electronic converters are commonly used for interfacing distributed generation (DG) systems to the electrical power network. However, the unbalanced voltage compensation may cause adverse effects on the IFCs' operation such as output active power oscillation and DC link voltage variations. Moreover, since the compensation is realized through the available rating of IFCs, it is equally important to consider the effectiveness of control strategy for unbalanced voltage compensation. Specially, the first control strategy aims at minimizing the IFC's active power oscillation and reducing the adverse effects of unbalanced voltage compensation on IFC's operation. In DG systems a fast and accurate positive-sequence, fundamental grid voltage frequency and magnitude tracking is required to synchronize grid connected converter systems with the mains. The proposed System deals with a Multi level inverter for DG systems mitigating power quality issues, such as harmonics and reactive power compensation for grid-connected operation. It performs the nonlinear load current harmonic compensation, mitigates harmonics yielding more accurate and pure sine wave output. So Instead of using inverter we can use multilevel inverters in the power system equipment.

KEYWORDS: *DG Systems, IFC, Unbalanced voltage compensation, Multi level inverter*

I. INTRODUCTION

The distributed generation (DG) concept emerged as a way to integrate different power plants, increasing the DG owner's reliability, reducing emissions, and providing additional power quality benefits [1]. Modern electrical systems, due to wide spread of power conversion units and power electronics equipments, causes an increasing harmonics disturbance in the ac mains currents. These harmonics currents causes adverse effects in power systems such as overheating, perturbation of sensitive control and communication equipment, capacitor blowing, motor vibration, excessive neutral currents, resonances with the grid and low power factor. As a result, effective harmonic reduction from the system has become important both to the utilities and to the users.

The solution over passive filters for compensating the harmonic distortion and unbalance is the shunt active power filter (APF). The APF is actually an inverter that is connected at the common point of coupling to produce harmonic components which cancel the harmonic components from a group of nonlinear loads to ensure that the resulting total current drawn from the main incoming supply is sinusoidal [2]. Shunt APFs are the most commonly used topology and they are connected in parallel with the AC line. APFs have certain advantages if compared to the passive power filters. They are known to be able to adapt concurrently to changing loads, can be expanded easily and will not affect neighborhood equipments.

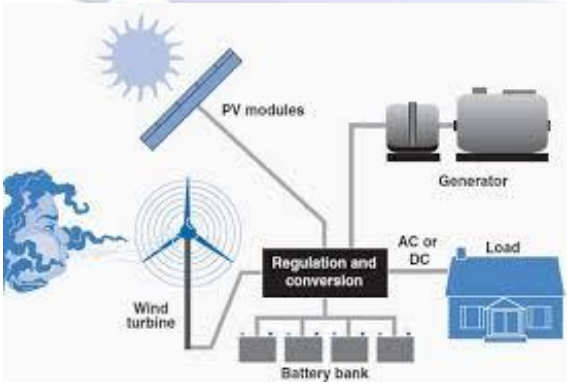

Fig.1. Distributed Generation Systems

In recent years, distributed generations (DGs) that can be classified into power generation from renewable energy resources such as wind, photovoltaic, the clean alternative energy generation technologies such as fuel cells and micro turbines, as well as the traditional rotational machine based technologies such as diesel generators are playing an important role in active distribution or even transmission power systems oscillations at the output of power electronic converters, which are reflected as ripple in the DC link voltage.

This is particularly true considering that the DC link capacitors in three-phase power systems are typically small. Moreover, unbalanced voltage will increase the peak current of power converter in the same active and reactive power production, which may result in over currents protection. Therefore, appropriate methods should be applied in the distribution system in order to compensate unbalanced voltage.

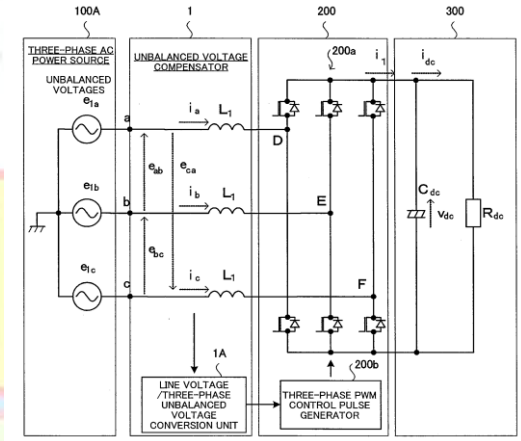

Fig. 2. Unbalanced voltage compensation

II. METHODOLOGY

A. Unbalanced Voltage Compensation with Active Power Oscillation Minimization

In active power oscillation cancellation strategy [8], [9], the level of unbalanced voltage compensation cannot be controlled directly.

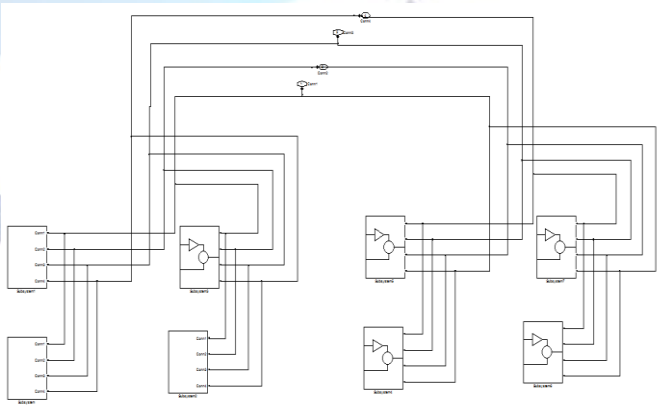

Fig. 3. Subsystem of the inverter design

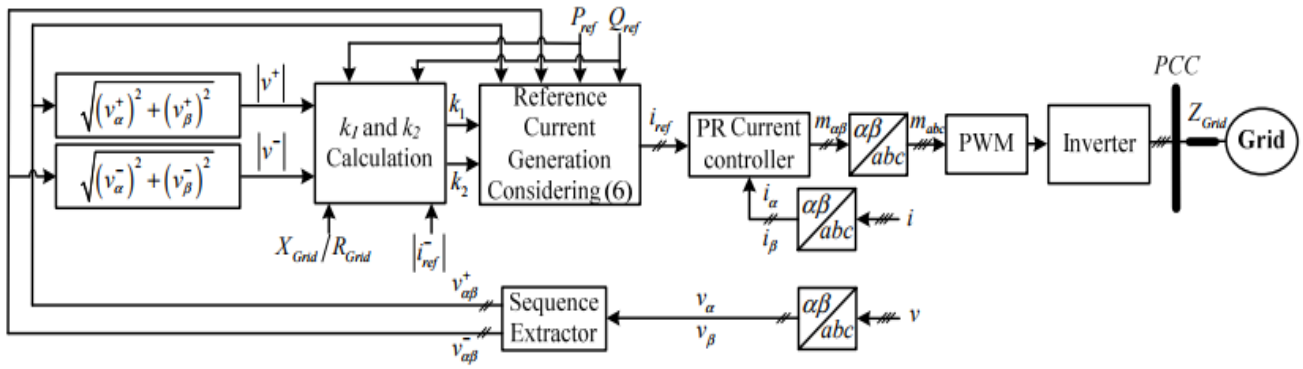

Figure 4: Proposed control strategies of interfacing converter for the unbalanced voltage compensation.

A. *Comparison to Balance IFC Current Injection without Compensation*

Utilizing the proposed methods, with IFC's compensation and the equivalent small negative sequence virtual impedance, the negative sequence load current is directed to the DG side, resulting in less negative sequence current in the grid (i` grid) and therefore the negative sequence voltage at PCC are reduced in all conditions in the both proposed methods. However, considering (2) and (3), the presence of i` increase the active and reactive powers oscillations in comparison to balance current injection.

B. *Comparison between Two Proposed Methods*

In the active power oscillation minimization strategy, IFC's negative sequence current (or negative sequence virtual impedance) is controlled in order to minimize the active power oscillation at the output.

In the both methods, increasing Ii-I will reduce Ii=gridI, which leads to more reduction of negative sequence voltage at PCC (although the active and reactive powers oscillation will increase). In small DGs, due to lower Ii-I, performance difference of the two proposed control strategies in terms of the negative sequence voltage reduction will not be very obvious. Therefore, the active power oscillation will be a dominant factor when comparing the two methods.

On the other hand, in large DGs, due to possibility of Ii-I, the difference negative sequence voltage reduction between the two methods will be more obvious and become a dominant factor in methods comparison. Additional comparisons of the two proposed strategies are provided in the following subsections.

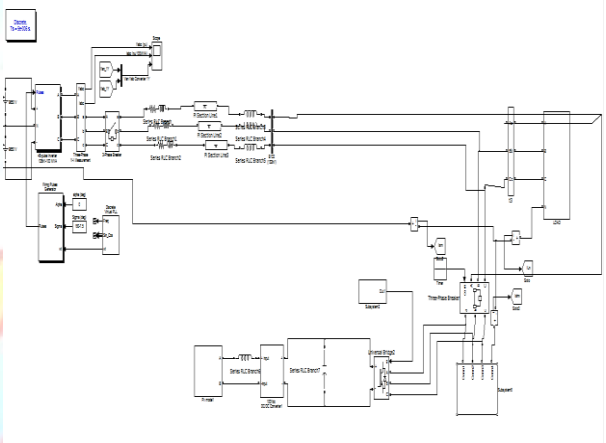

Fig. 5. Multi Level inverter design

Difference of the two methods will be very obvious in terms of active power oscillation and negative sequence voltage reduction.

(See TABLE I. which the negative sequence voltage of ΔP-minimization strategy is 1.46 times larger than in-phase current compensation while its active power oscillation is 0.72 of in-phase current compensation).

Grid impedance conditions		$X_{Grid} \gg R_{Grid}$ $R = 1\times10^{-3}\Omega$ $X = 0.753\Omega$		$X_{Grid} \ll R_{Grid}$ $R = 0.753\Omega$ $X = 1\times10^{-3}\Omega$	
IFC's output active-reactive powers		$20kW$ $5kVar$	$5kW$ $20kVar$	$20kW$ $5kVar$	$5kW$ $20kVar$
$\lvert i^-_{Load}\rvert$ (A)	No compensation	18.12	20.82	17.08	14.24
	ΔP-minimization	17.42	20.80	18.17	15.12
	In-phase current	18.26	20.95	18.20	15.30
	$\frac{\Delta P\text{-minimization}}{\text{In-phase current}}$ ratio	0.96	0.99	0.99	0.98
$\lvert v^-\rvert$ (V)	No compensation	13.66	15.70	12.88	10.74
	ΔP-minimization	9.10	8.26	6.25	6.88
	In-phase current	6.23	8.26	6.15	4.00
	$\frac{\Delta P\text{-minimization}}{\text{In-phase current}}$ ratio	1.46	1	1.01	1.72
ΔP (W)	No compensation	1368	1368	1228	1228
	ΔP-minimization	2177	2835	2643	1921
	In-phase current	3005	2862	2673	2626
	$\frac{\Delta P\text{-minimization}}{\text{In-phase current}}$ ratio	0.72	0.99	0.98	0.73
ΔQ (Var)	No compensation	1368	1368	1228	1228
	ΔP-minimization	4007	4267	3840	3487
	In-phase current	3297	4248	3820	2850
	$\frac{\Delta P\text{-minimization}}{\text{In-phase current}}$ ratio	1.21	1.004	1.005	1.22

TABLE I. CASE STUDY RESULTS FOR BOTH PROPOSED CONTROL STRATEGIES WITH Ii-refI= 10A UNDER DIFFERENT IFC'S OUTPUT P/Q RATIOS (S=20.61kva) AND THE GRID CONDITIONS (IzgridI=0.75398Ω)

III. MULTI LEVEL INVERTERS

A. Introduction

Multilevel inverter technology has emerged recently as a very important alternative in the area of high-power medium-voltage energy control. This paper presents the most important topologies like diode-clamped inverter (neutral-point clamped), capacitor-clamped (flying capacitor), and cascaded multicell with separate dc sources. Emerging topologies like asymmetric hybrid cells and soft-switched multilevel inverters are also discussed.

It also presents the most relevant control and modulation methods developed for this family of converters: multilevel sinusoidal pulsewidth modulation, multilevel selective harmonic elimination, and space-vector modulation. Special attention is dedicated to the latest and more relevant applications of these converters such as laminators, conveyor belts, and unified power-flow controllers. The need of an active front end at the input side for those inverters supplying regenerative loads is also discussed, and the circuit topology options are also presented. Finally, the peripherally developing areas such as high-voltage high-power devices and optical sensors and other opportunities for future development are addressed.

B. Applications in Power Systems

When the number of levels is greater than three, both the diode-clamped and cascaded multilevel inverters have equivalently separate dc sources for each level in order to enable power conversion involving real power such as in motor drives [1, [57]. However, as mentioned previously, both inverters have a perfect niche in harmonic and reactive power compensation [5], [6], [6]. The capacitor-clamped inverter cannot have balanced voltage for power conversion involving only reactive power [61], thus, it is not suited for reactive power compensation. The first unified power-flow controller (UPFC) in the world was based on a diode-clamped three-level inverter [7].

The UPFC is comprised of the back-to-back connection of two identical GTO thyristor-based three-level converters, each rated at 160 MVA; it was commissioned in mid-1998 at the Inez Station of American Electric Power (AEP) in Kentucky for voltage support and power-flow control. Fig. 31 shows the system configuration. On the other hand, the cascaded multilevel inverter is best suited for harmonic/reactive compensation and other utility applications [13], [6], [3], since each H-bridge inverter unit can balance its dc voltage without requiring additional isolated power sources. GEC Alsthom T&D has commercialized the cascaded multilevel inverter for reactive power compensation/generation (STATCOM) [7].

C.CONTROL TECHNIQUE

By looking at the number of papers published in recent years, it is easy to conclude that multilevel inverter research and development activities are experiencing an explosive rate of growth. A trend of having more and more multilevel inverters is obvious.

Although this paper has focused on multilevel inverter circuit topology, control, and applications, there is other research and development in related areas, such as high-voltage high-power semiconductor devices, sensors, high-speed DSPs, thermal management, and packaging.

IV. EXPERIMENTAL RESULTS

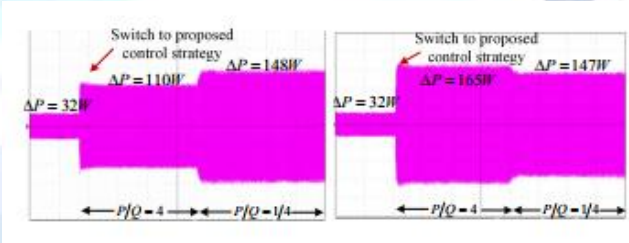

(a) (b)

Fig. 6. Active power oscillations in the inductive grid; (a) ΔP -minimization strategy, (b) in-phase current compensation strategy (time: 1 s/div, power: 50 W/div)

.

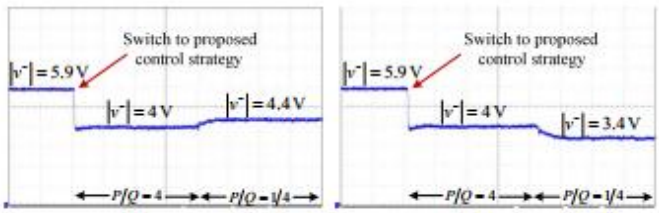

(a) (b)

Fig. 7. Negative sequence voltage of PCC in the weak resistive grid; (a) ΔP - minimization strategy, (b) in-phase current compensation strategy (time: 1 s/div, voltage: 1 V/div).

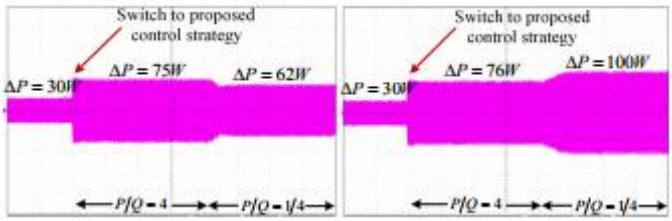

(a) (b)

Fig. 8. Active power oscillations in the weak resistive grid; (a) ΔP - minimization strategy, (b) in-phase current compensation strategy (time: 1 s/div, power: 50 W/div).

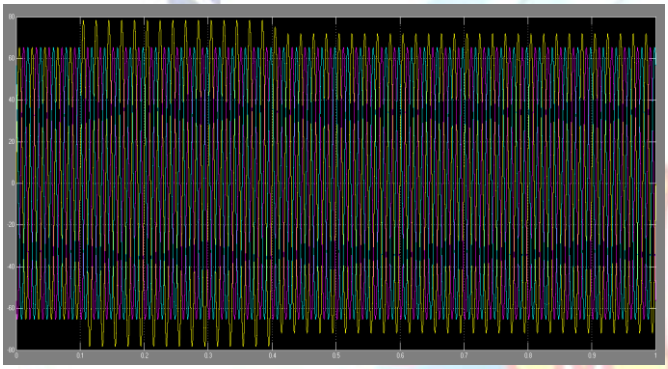

(a)

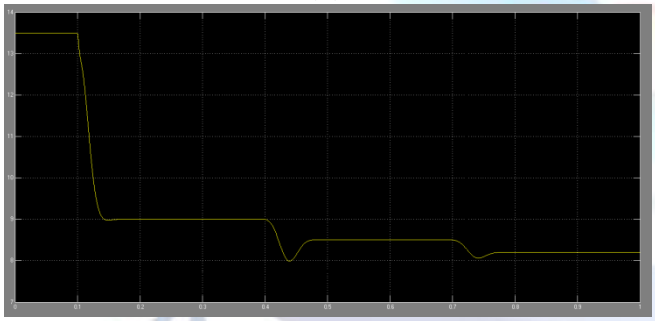

(b)

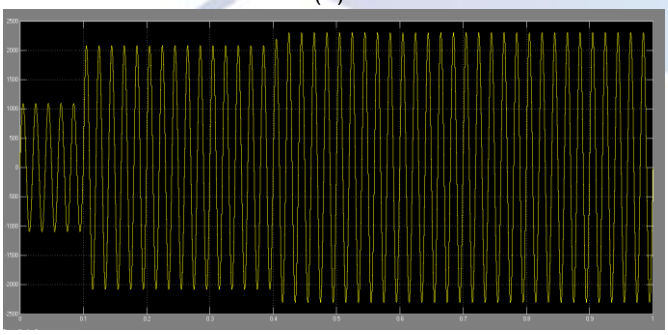

(c)

Fig 9 (a), (b), (c) : simulation results before implementation of Multilevel inverter

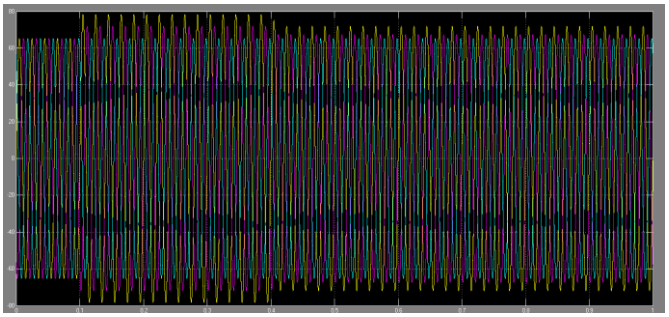

(a)

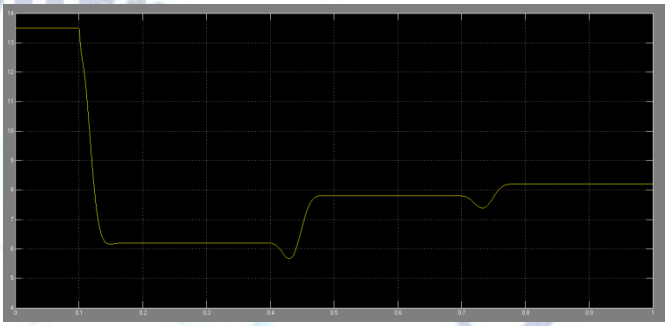

(b)

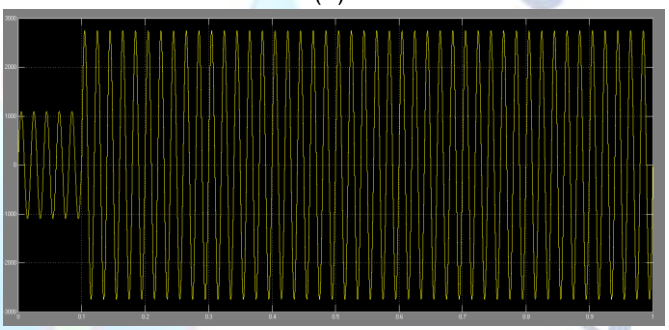

(c)

Fig 10(a), (b), (c) : simulation results After implementation of Multilevel inverter

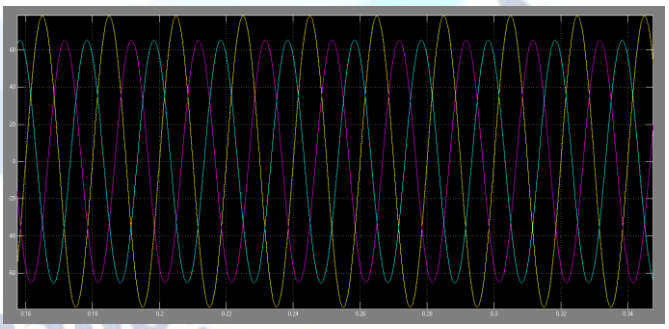

Fig 11 Pure sine wave output obtained by the implementation of Multi level inverter

V. Conclusion

In this paper, two control strategies for three-phase power electronics interfaced DG system are proposed in order to compensate the grid steady-state unbalanced voltage. In the first

method, in order to reduce the adverse effects of compensation on the interfacing converter's operation, IFC's active power oscillation is minimized in the compensation strategy.

The proposed System deals with a Multi level inverter for DG systems mitigating power quality issues, such as harmonics and reactive power compensation for grid-connected operation. It performs the nonlinear load current harmonic compensation, mitigates harmonics yielding more accurate and pure sine wave output. So Instead of using inverter we can use multilevel inverters in the power system equipment.

References

[1] F. Nejabatkhah and Y. W. Li, "Overview of power management strategies of hybrid AC/DC microgrid," IEEE Trans. Power. Electron., in Press, 2015.

[2] A. Von Jouanne, and B. Banerjee, "Assessment of voltage unbalance," IEEE Trans. Power Del., vol. 16, no. 4, pp. 782-790, Oct 2001.

[3] L. Tzung-Lin, H. Shang-Hung, and C. Yu-Hung, "D-STATCOM with positive-sequence admittance and negative-sequence conductance to mitigate voltage fluctuations in high-level penetration of distributed-generation systems, " IEEE Trans. Ind. Electron., vol. 60, no. 4, pp. 1417-1428, Apr. 2013.

[4] M. Savaghebi, A. Jalilian, J. C. Vasquez, and J. M. Guerrero, "Autonomous voltage unbalance compensation in an islanded droop-controlled microgrid, " IEEE Trans. Ind. Electron., vol.60, no.4, pp.1390,1402, Apr. 2013.

[5] D. Graovac, V. A. Kati, and A. Rufer, "Power quality problems compensation with universal power quality conditioning system," IEEE Trans. Power Del., vol. 22, no. 2, pp. 968–976, Apr. 2007.

[6] B. Singh and J. Solanki, "An implementation of an adaptive control algorithm for a three-phase shunt active filter," IEEE Trans. Ind. Electron., vol. 56, no. 8, pp. 2811–2820, Aug. 2009.

[7] F. Wang, J. L. Duarte, and M. A. M. Hendrix, "Grid-interfacing converter systems with enhanced voltage quality for microgrid application—concept and implementation," IEEE Trans. Power Electron., vol. 26, no. 12, pp. 3501–3513, Dec. 2011.

[8] J. Miret, A. Camacho, M. Castilla, L. G. Vicuna, and J. Matas, "Voltage support control strategies for static synchronous compensators under unbalanced voltage sags," IEEE Trans. Ind. Electron., vol. 61, no. 2, pp. 808–820, Apr. 2013.

[9] A. Camacho, M. Castilla, J. Miret, A. Borrell, and L. de Vicuna, "Active and reactive power strategies with peak current limitation for distributed generation inverters during unbalanced grid faults," IEEE Trans. Ind. Electron., vol. 62, no. 3, pp. 1515-1525, Mar. 2015.

[10] R. Teodorescu, M. Liserre, and P. RodrÕguez, Grid Converters for Photovoltaic and Wind Power Systems, New York, NY, USA: Wiley, 2011.

[11] J. Miret, M. Castilla, A. Camacho, L. GarcÕa de Vicua, and J. Matas, "Control scheme for photovoltaic three-phase inverters to minimize peak currents during unbalanced grid-voltage sags," IEEE Trans. Power Electron., vol. 27, no. 10, pp. 4262–4271, 2012.

[13] A. Camacho, M. Castilla, J. Miret, J. Vasquez, and E. Alarcon-Gallo, "Flexible voltage support control for three phase distributed generation inverters under grid fault," IEEE Trans. Ind. Electron., vol. 60, no. 4, pp. 1429–1441, 2013.J. Miret, A. Camacho, M. Castilla, L. G. de Vicuna, and J. Matas, "Control scheme with voltage support capability for distributed generation inverters under voltage sags," IEEE Trans. Power Electron., vol. 28, no. 11, pp. 5252–5263, Nov. 2013.

[14] C. T. Lee, C. W. Hsu, and P. T. Cheng, "A low-voltage ride-through technique for grid-connected converters of distributed energy resources," IEEE Trans. Ind. Appl., vol. 47, no. 4, pp. 1821–1832, Jul. 2011.

[15] S. Alepuz, S. B. Monge, J. Bordonau, J. M. Velasco, C. Silva, J. Pont, and J. Rodriguez, "Control strategies based on symmetrical components for grid-connected converters under voltage dips," IEEE Trans. Ind. Electron., vol. 56, no. 6, pp. 2162–2173, Jun. 2009.

[16] H. Akagi, E. H. Watanabe, and M. Aredes, Instantaneous Power Theory and Applications to Power Conditioning, Hoboken, New Jersey, USA: IEEE Press, 2007.

[17] P. M. Andersson, Analysis of Faulted Power Systems, New York, NY, USA: IEEE Press, 1995.

[18] J. Lu, F. Nejabatkhah, Y. Li, and B. Wu, "DG control strategies for grid voltage unbalance compensation," IEEE Energy Conversion Congress and Exposition (ECCE), pp.2932-2939, 14-18 Sept. 2014.

[19] F. Wang, J. L. Duarte, and M. A. M. Hendrix, "Pliant active and reactive power control for grid-interactive converters under unbalanced voltage dips," IEEE Trans. Power Electron., vol. 26, no. 5, pp. 1511–1521, May 2011.

[20] N. Hoffmann, and F. W. Fuchs "Minimal invasive equivalent grid impedance estimation in inductive–resistive power networks using extended kalman filter", IEEE Trans. Power Electron., vol. 29, no. 2, pp. 631–641, Feb. 2014.