International Journal for Modern Trends in Science and Technology
Volume: 03, Special Issue No: 02, March 2017
ISSN: 2455-3778
http://www.ijmtst.com

Comparison of Dynamic Performance of ANN and PID Controllers for an Interconnected Hydro - Thermal System

V. Anantha Lakshmi[1] | J. Rajesh[2] | G T Sai Kamal[3] | Md.Nadeem[4]

[1]Assistant Professor, Department of EEE, Andhra Loyola Institute of Engineering & Technology, Vijayawada, Andhra Pradesh, India.
[2,3,4]Department of EEE, Andhra Loyola Institute of Engineering & Technology, Vijayawada, Andhra Pradesh, India.

To Cite this Article
V. Anantha Lakshmi, J. Rajesh, G T Sai Kamal and Md.Nadeem, "Comparison of Dynamic Performance of ANN and PID Controllers for an Interconnected Hydro - Thermal System", *International Journal for Modern Trends in Science and Technology*, Vol. 03, Special Issue 02, 2017, pp. 05-09.

ABSTRACT

In this paper a new load frequency controller using the concept of Artificial Neural networks is presented. A comparison was made, which showed the effectiveness of Artificial Neural Network controller over other conventional controllers like PID controller. Differences in their steady state intervals have been observed, when two areas of hydro and thermal stations are interconnected based on back propagation algorithm.

KEYWORDS: *Automatic Generation Control, Artificial Neural network (ANN), Back Propagation algorithm, Area control error*

I. Introduction

The successful operation of interconnected power systems requires the matching of total generation with total load demand and associated system losses. With time, the operating point of a power system changes, and hence, these systems may experience deviations in nominal system frequency and scheduled power exchanges to other areas, which may yield undesirable effects. In actual power system operations, the load is changing continuously and randomly. The ability of the generation side to track the changing load is limited due to physical / technical consideration, causing imbalance between the actual and the scheduled generation quantities. This action leads to a frequency variations. The difference between the actual and the synchronous frequency causes mal operation of sophisticated equipment like power converters by producing harmonics.

II. NEED OF LOAD FREQUENCY CONTROL

The active and reactive power demands are never steady and they continuously changes with the rising or falling trend of load demand. There is a change in frequency with the change in load which causes problems such as:

1. Most AC motors run at speeds that are directly related to frequency. The speed and induced electro motive force (e.m.f) may vary because of the change of frequency of the power circuit.
2 .When operating at frequencies below 49.5 Hz; some types of steam turbines, certain rotor states undergo excessive vibration.

3. The change in frequency can cause mal operation of power converters by producing harmonics.
4. For power stations running in parallel it is necessary that frequency of the network must remain constant for synchronization of generators.

III. EXISTING CONTROLLERS AND GAPS

The performance evaluation based on different conventional controllers (PI & PID) and intelligent controllers like (Fuzzy, ANN) with different gain scheduling has been carried out. The fuzzy controller offers better performance over the conventional controllers, especially, in complex and nonlinearities associated system. Among the various types of load frequency controllers, the most widely employed is the conventional proportional integral (PI) controller. The PI controller is simple for implementation but generally gives large frequency deviations. The performance of PI and PID controllers deteriorates as the complexity of the system increased due to the nonlinearity and boilers dynamics in the interconnected power system. In order to keep the system performance near its optimum, it is desirable to track the operating conditions and use updated parameters to compute the control.

Fuzzy technique has been applied to the Load Frequency Control problems with rather promising results. The salient feature of these techniques is that they provide a model-free description of control systems and do not require model identification. Whereas fuzzy control technique also has some limitations of selecting proper membership functions and defuzzification problem. Then it has been thought of a controller which can even work with nonlinearities and can give fast response. The Artificial Neural Network came in existence. By training the neurons, multiplying with weight and applying a suitable activation function, the output can be obtained. The ANN controller works better for large power system or unstructured system.

IV. BIOLOGICAL NEURAL NETWORK

Human brain has over 100 billion interconnected neurons. Most sophisticated application have only tiny fraction of that. It can only be imagined how powerful NN with this number of interconnected neurons would be. Neurons use this interconnected network to pass information's with each other using electric and chemical signals. Although it may seem that neurons are fully connected, two neurons actually do not touch each other. They are separated by tiny gap call synapse. Each neuron process information and then it can "connect" to as many as 50 000 other neurons to exchange information. If connection between two neuron is strong enough (will be explained later) information will be passed from one neuron to another. On their own, each neuron is not very bright but put 100 billion of them together and let them take to each other, then this system becomes very powerful. A typical neuron would have four components seen on figure. Dendrites, Soma, Axon and synapse.

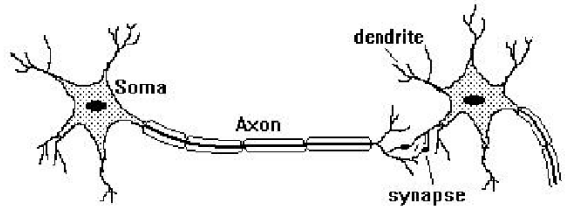

Fig (4.1): Biological neural network

Dendrites gather input from other neurons and when a certain threshold is reached they generate a non- linear response (signal to other neurons via the axon).

V. ARTIFICIAL NEURAL NETWORK

Artificial neural networks (ANN) has been developed as generalizations of mathematical models of biological nervous systems. A first wave of interest in neural networks emerged after the introduction of simplified neurons. The basic processing elements of neural networks are called artificial neurons, or simply neurons or nodes. In a simplified mathematical model of the neuron, the effects of the synapses are represented by connection weights that modulate the effects of the associated input signals, and the non-linear characteristics exhibited by neurons is represented by a transfer function. The neurons impulse is then computed as the weighted sum of the input signals, transformed by the transfer function. The learning capability of an artificial neuron is achieved by adjusting the weights in accordance to the chosen learning algorithm.

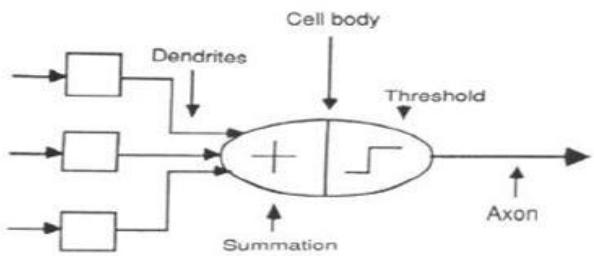

Fig (5.1):Artificial neural network

A typical artificial neuron and the modelling of a multi layered neural network are illustrated in architecture. Referring to the architecture, the signal flow from inputs $x_{1.....}x_n$ is considered to be unidirectional, which are indicated by arrows, as is a neuron output flow (Y). The neuron output signal flow Y is given by the following relationship:

$$Y = f(net) = f(\sum_{j=1}^{n} w_j x_j)$$

Where w_j the weight vector, and the function is $f(net)$ is referred to as an Activation (transfer) function. The variable net is defined as a scalar product of weight and input vectors,

$$net = w^T x = w_1 x_1 + ... + w_n x_n$$

Where T is the transpose of a matrix, and in the simplest case, the output value is computed as

$$Y = f(net) = \{^{1 if w^T x \geq \theta}_{0 otherwise}$$

Where θ is called threshold level; and this type of node is is called a linear threshold unit.

VI. ARCHITECTURE AND DESIGN

Figure represents architecture of a simple NN. It is made up from an input, output and one or more hidden layers. Each node from input layer is connected to a node from hidden layer and every node from hidden layer is connected to a node in output layer. There is a usually some weight associated with every connection. Input layer represents the raw information that is fed into the network. This part of network is never changing its values. Every single input to the network is duplicated and send down to the nodes in hidden layer. Hidden layer accepts data from the input layer. It uses input values and modifies them using some weight value, this new value is then send to the output layer but it will also be modified by some weight from connection between hidden and output layer. Output layer process information received from the hidden layer and produces an output. This output is then processed by activation function.

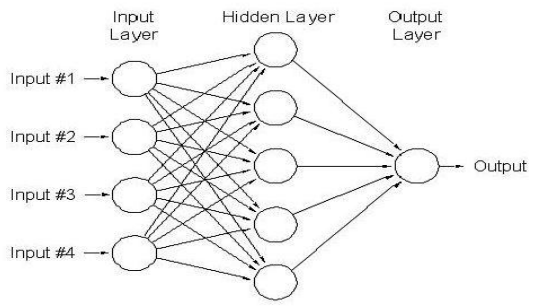

Fig (6.1): Simple Neural network

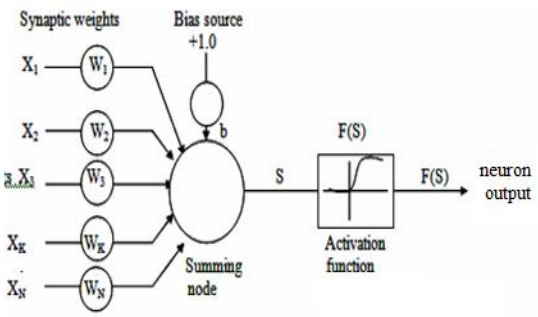

Fig (6.2): Architecture of simple neuron

Design

Algorithm for neural structure is given below:

1. Assume the inputs and outputs in the normalized form with respect to their maximum values and these are in the range of 0, 1
2. Assure the No. of input stages given network.
3. Indicate the No. of hidden layers for the network.
4. Design the new feed forward network based on the system parameters 'transig (transient sigmoidal)' and 'poslin' (position linear).
5. Assume the learning rate be 0.02 for the given network.
6. Identify the number of iterations for the system.
7. Enter the goal.
8. Train the network based on the given inputs and outputs.
9. For the given network generate simulation with a command 'genism'.

VII. BACK PROPAGATION (BP) ALGORITHM

One of the most popular NN algorithm is back propagation algorithm. It consists of four main steps. After choosing the weights of the network randomly, the back propagation algorithm is used to compute the necessary corrections. The algorithm can be decomposed in the following steps.

1) Feed Forward computation.

2) Back propagation to the output layer.
3) Back propagation to the hidden layer.
4) Weight updates.

The updation of weights in back propagation algorithm is done as follows:
The error signal at the output of neuron *j* at iteration n is given by

$$e_j(n) = d_j(n) - y_j(n) \qquad (1)$$

The instantaneous value of error for neuron *j* is $\frac{1}{2}e_j^{\,2}(n)$. The instantaneous value $\varepsilon(n)$ of total errors obtained by summing $\frac{1}{2}e_j^{\,2}(n)$ of all neurons in output layer

$$\varepsilon(n) = 1/2\sum_{j\in c} e_j^{\,2}(n) \qquad (2)$$

Where c includes all neurons in the output layer. Average squared error is given by

$$\varepsilon_{avg} = \frac{1}{N}\sum_{n=1}^{N}\varepsilon(n) \qquad (3)$$

Where N is total number of patterns in training set. So minimization of ε_{avg} is required. So back propagation algorithm is used to update the weights. Induced local field $v_j(n)$ produced at input of activation function is given by

$$v_j(n) = \sum_{i-0}^{m} w_{ji}(n)x_i(n) \qquad (4)$$

Where m is the number of inputs applied to neuron to neuron *j*. So the output is written as

$$y_j(n) = \phi_j(v_j(n)) \qquad (5)$$

The back propagation algorithm applies a correction $\Delta w_{ji}(n)$ to weights $w_{ji}(n)$ which is proportional to partial derivative $\frac{\partial\varepsilon(n)}{\partial w_{ji}(n)}$, which can be written as

$$\frac{\partial\varepsilon(n)}{\partial w_{ji}(n)} = \frac{\partial\varepsilon(n)}{\partial e_j(n)}\cdot\frac{\partial e_j(n)}{\partial y_j(n)}\cdot\frac{\partial y_j(n)}{\partial v_j(n)}\cdot\frac{\partial v_j(n)}{\partial w_{ji}(n)} \qquad (6)$$

Differentiating the equation(2) with respect to $e_j(n)$

$$\frac{\partial\varepsilon(n)}{\partial e_j(n)} = e_j(n) \qquad (7)$$

Differentiating equation (1) with respect to

$$\frac{\partial e_j(n)}{\partial y_j(n)} = -1 \qquad (8)$$

Differentiating equation (5) we get

$$\frac{\partial y(n)}{\partial v_j(n)} = \Phi_j^1(v_j(n)) \qquad (9)$$

Differentiating equation (4) with respect to $w_{ji}(n)$

$$\frac{\partial v_j(n)}{\partial w_{ji}(n)} = x_i(n) \qquad (10)$$

So using equation(7-10) in equation(6) we get

$$\frac{\partial\varepsilon(n)}{\partial w_{ji}(n)} = -e_j(n)\phi_j^1(v_j(n))x_i(n) \qquad (11)$$

The correction applied to is defined by

$$\Delta w_{ji}(n) = -\eta\frac{\partial\varepsilon(n)}{\partial w_{ji}(n)} \qquad (12)$$

Where η is learning rate parameter. It is seen that the Area Control Error (ACE) and rate of change of ACE are considered as inputs in the input layer and is considered as output in the output layer.

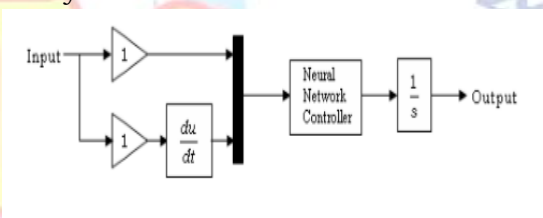

Fig (8.1): MATLAB/SIMULINK Implementation of logic

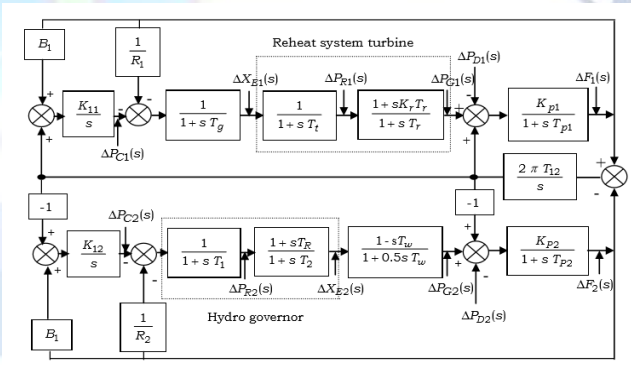

Fig (8.2): Block diagram of interconnected hydro-thermal system

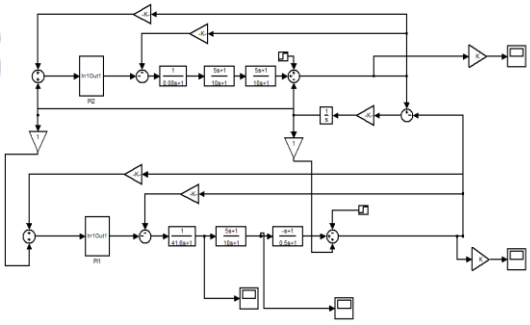

Fig(8.3):Simulink model of Hydro-Thermal system with PID controller

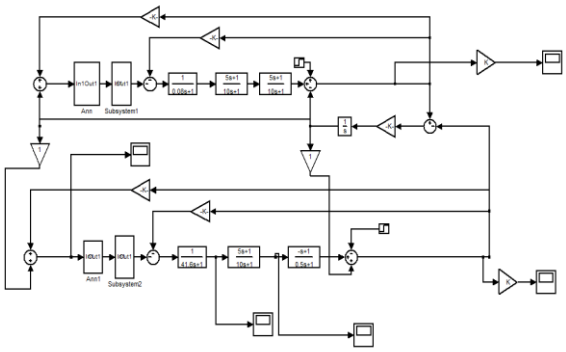

Fig(8.4):Simulink model of Hydro-Thermal system with ANN controller

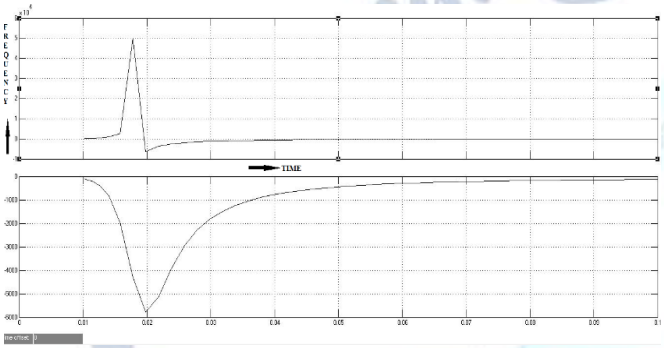

Fig (8.5): Frequency deviations in both the areas using PID

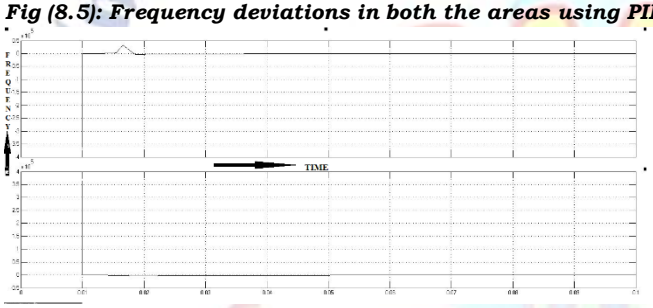

Fig (8.6): Frequency deviations in both the areas using ANN

VIII. CALCULATION AND RESULT

The activation function used in this work for both the layers is log-sig function. Table 1 shows the values of weights between input layer and hidden layer obtained during training phase, where the rows correspond to input nodes and columns correspond to hidden nodes. Table 3 shows the values of weights between hidden layer and outer layer obtained during training phase, where the rows correspond to hidden nodes and columns correspond to output nodes. Table 4 shows the bias value at the output node.

Table 1.Weights between input and hidden nodes.

	Node 1	Node 2	Node 3
Node 1	502.26	1723.7	2654.4
Node 2	498.58	423.64	-381.8

Table 2. Bias values at hidden nodes

Node 1	0.6004
Node 2	0.9900
Node 3	13.648

Table 3 Weights between hidden and output nodes

	Node 1
Node 1	-2.2086
Node 2	1.8983
Node 3	-8.177

Table 4 Bias Value at output node

Node 1	1.918

Comparison of controllers

	Thermal Area		Hydro Area	
	Peak Time	Settling time	Peak Time	Settling Time
PID	0.0174	0.0484	0.0198	0.065
ANN	0.0158	0.0526	0.0151	0.046

IX. CONCLUSION

The performance of integral controller and neural controller for a two area hydrothermal system has been investigated. It has been observed that the integral is a capable of bringing better dynamic response of the system to some extent. But the conventional design approach requires a deep understanding of the system, exact mathematical models and precise numerical values. The control strategy developed with the help of training mechanism using back propagation algorithm can be employed to bring better dynamic response of the system. The simulation results show the superior performance of the system using neural network controller.

REFERENCES

[1] C. and L.K.Kirchmayer, Tie-Line Power and Frequency Control of Electric Power System – Part 2.

[2] M.L.Kothari, B.L.Kaul and J.Nanda, Automatic Generation Control of Hydro-Thermal System.

[3] G.A.Chown and R.C.Hartman. Design and experience with a fuzzy logic controller for Automatic generation control.

[4] Jawad Talaq and Fadal Al-Basari. Adaptive fuzzy gain scheduling for load frequency control.

APPENDIX

$R = 2.4 Hz / p.u.MW$;

$D = 8.33 \times 10^{-3}\ p.u.MW / Hz\ K_g = 1$;

$T_g = 0.08 \sec$; $K_t = 1$; $T_t = 0.3$; $K_r = 0.5$;

$T_r = 10 \sec$; $T_1, T_2, T_R = 41.6, 0.513, 5 \sec$;

$K_p = 120 Hz / p.u.MW$;

$T_p = 20 \sec$; $B = 0.425\ p.u.MW / Hz$