Impact of Hybrid Distributed Generator on Transient Stability of Power System

V. Sujatha[1] | M. Umarani[2]

[1]PG Scholar, Department of EEE, Godavari Institute of Engineering and Technology, Rajahmundry, Andhra Pradesh, India.
[2]Assistant Professor, Department of EEE, Godavari Institute of Engineering and Technology, Rajahmundry, Andhra Pradesh, India.

ABSTRACT

Due to increasing integration of new technologies into the grid such as hybrid electric vehicles, distributed generations, power electronic interface circuits, advanced controllers etc., the present power system network is now more complex than in the past. Consequently, the recent rate of blackouts recorded in some parts of the world indicates that the power system is stressed. The real time/online monitoring and prediction of stability limit is needed to prevent future blackouts.

The aggravated increase in energy demand has posed a serious problem for the power system's stability and reliability, and hence has become of major concern. The shortcomings of conventional source of energy have paved way for renewable energy sources. The latter can form a part of a stand alone system or grid connected system. A single renewable source of energy When integrated with other sources of energy it is termed as hybrid system. This thesis deals with PV, Wind, Hydro system.

In this thesis an active power control strategy has been developed such that when the wind alone is not able to meet the energy demand, without compromising the frequency a transition occurs to wind diesel mode so that the energy demand is met. The mathematical model considered uses a STATCOM to meet the reactive power need upon sudden step change in power. The performance and the analysis is done in a user friendly MATLAB/Simulink environment.

KEYWORDS: *Transient Stability, Distributed Generator, Lithium Ion Battery, Terminal Voltage and Rotor Speed Deviation.*

I. INTRODUCTION

Distributed generation is getting a lot of focus in recent years due to various energy and environmental concerns. Unlike the conventional generators, the distributed generators use both non-renewable and renewable sources of energy to generate electricity. Major technical and economic issues arise when these DG"s are interconnected with the electric grid. The technical issues include stability, power quality, protection issues and voltage fluctuations. It has to be noted that certain renewable generators such as wind and solar do not produce power at a constant rate since they are dependent on the natural forces. This makes the use of storage devices very essential.

There has been increased point up in the decades on the concept of smoothing intermittent output of distributed generation (DG) using energy storage [1]. DGs can be defined as the concept of connecting generating units of small sizes, between several kW to a few MW. The primary source of energy for these generators can be the traditional non - renewable sources such as gas or the renewable sources such as wind, solar, hydro, and biomass [3]. These generators are connected either to the medium voltage or low voltage sections of the electric grid. Most often

they are connected near the load centers or the low voltage networks.

In case of certain renewable technologies, such as wind turbines and solar panels, the output power depends upon the availability of renewable resource and therefore may not always be constant. In such cases, in order to augment the DGs during low power periods, energy storage devices are used [3]. Other than wind and solar, storage can help in smoothing the power in conjunction with biomass especially for rural combined heating and power applications. These devices store energy during periods of high power or low demand and use the stored energy to supply the excess loads during periods of low power. Different types of energy storage devices that are used in a distributed environment include batteries, ultra capacitors, flywheels, fuel cells and superconducting magnetic energy storage [4]-[7]. In addition to supporting the DGs during peak demand, the storage devices may also help in improving the overall stability of the entire system. These energy storage devices are connected to the electric grid by means of suitable power conversion devices [8]-[10].

Certain DG techniques such as wind and solar, do not output constant power at all times. In such cases, storage of power for later use becomes essential. The energy storage devices store power from the DG"s during times of normal output and low loads. This stored energy can be used at time when there is no DG output or during periods of high demands. The storage device that needs to be used depends upon the application, amount of storage needed and the duration of storage. Most of the storage devices are DC, so we need power electronic interfaces to connect them to the AC system.

DG"s can operate in two modes namely stand-alone and grid connected. The grid connected mode has drawn a lot of attention and analysis recently, due to its impacts on the grid. Though the DG has a lot of advantages, it also has some negative impacts especially when connected to the grid.

The most critical technical issue is the stability of the system. There have been a number of studies on the both the steady state and the transient stability impacts of DG on systems. As mentioned earlier, energy storage devices also have significant impact on the system. Based on the indicators and approach selected in the references, a procedure to analyze the stability has been obtained. This work also involves modeling of two energy storage devices, battery and ultra-capacitor.

II. Distributed Generation and Hybrid Distribution Generation

The definition of distribution generation (DG) in the literature can be stated as follows: A small capacity power plant based on either combustion-based technologies, such as reciprocating engines and turbines, or non-combustion based technologies such as fuel cells, photovoltaic, wind turbines, located on or near end-users and are characterized as renewables or cogeneration non-dispatched sources

HDG is expected to form an active part of future power system network in order to meet the future increasing demand for energy. The inherent potential to provide higher quality power, minimize power loss and produce more reliable power to consumers than a system based on a single source is the motivation behind the use of hybrid power generation. The objective of the integration is to capitalize on the strengths of both conventional and renewable energy sources, both cogeneration and non-cogeneration types. HDG can either be grid-connected or standalone system, renewable or nonrenewable system. HDG with one or more renewable (stochastic) or non-stochastic energy sources interact with the existing grid during import and export of power generation. This interaction contributes different level of fault current, reactive power, different inertia, therefore making the system vulnerable to different instabilities compare to single energy source. Presently, the promising sources of hybrid distributed generation are wind generator, solar PV, fuel cell, micro-hydro, small hydro, biomass, geothermal, tides, wave generator. Wind generator and solar PV are the most commonly used.

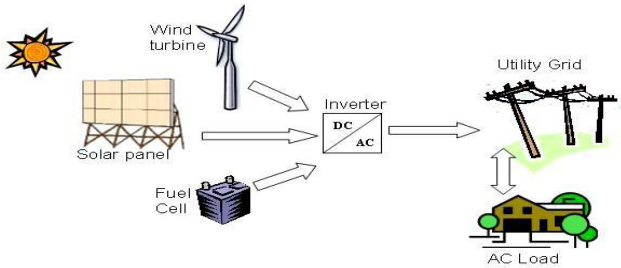

Fig.1. Representation of Distributed generation

III. Impact of Transient Stability on Distributed Generation

As mentioned in the previous section interconnection of DG to the grid impacts the stability of the grid to a great extend. In the earlier DG studies, the impacts on transient stability were almost neglected since the most important objective at that point was to produce electricity from renewable energy. When the size of DG is quite small, its impacts on the transient stability will be negligible and therefore can be neglected. But with the increase in the number of DG"s it becomes essential to analyze the transient stability. It is only in the recent years that greater focus is given on the stability impacts due to increasing usage of DG"s and their bigger sizes.

In reference [11], the transient stability of the New England test system is analyzed. The analysis includes asynchronous generators, controlled and uncontrolled synchronous generators as well as controlled and uncontrolled power electronic converters. In this approach a fault is applied to the system for 150 ms and the response of the different generator technologies with different penetration levels are monitored.

The response of these generator techniques are analyzed by means of three indicators namely rotor speed deviation, oscillation duration and the terminal voltage. This study proved that increase in the number of DG"s improved the stability of the system irrespective of the type of technology used. Similar approach has been used in reference [12], to analyze the angle, frequency and voltage stability of a 245-bus system. In this study, the power angle between two generators, the deviation in frequency and voltage deviation is analyzed when a fault of 100ms is applied to the system. Similar to the previous work, in this also it was seen that with more DG percentage, the stability of the system improves.

IV. Modeling of Hybrid Distributed Generation

There are two methods described in literature for modelling renewable energy. They are time-step simulation methods and probabilistic methods. The time-step simulation is based on analytical method or deterministic approach of modelling. It goes through a simulation period step by step and the conditions are assumed to be known ahead of time. Generally, time-step simulation is deterministic approach where the fault application or other disturbances are fixed or set ahead of time. Probabilistic approach on the other hand is based on a stochastic method. It is good at processing stochastic uncertainties such as uncertainties about training data, type of fault and location of fault coupled with the conditions of the system. Probabilistic approach can be used with time-step simulation. Recently, computational intelligence (CI) techniques are gaining recognition in modelling and assessment of dynamic stability. This research is proposing the use of computational intelligence method in modelling and assessment of hybrid DG (HDG). This is relatively a new idea proposed in this thesis to determine transient stability margin of grid integrated HDG instead of using the time-step simulation or probabilistic method. CI techniques involve the use of data gathering and training. CI techniques can be combined with time-step simulation and also used with probabilistic method.

This section describes the modelling of wind generator, solar PV, and small hydropower system using analytical modelling approach. The reason for choosing the above three renewable generators is because they are available in abundance and environmentally friendly. Rather than standalone type distributed generators (DG), the utility interactive HDG is considered which at the moment is gaining popularity.

There are two types of models in hybrid power generation.

1. Logistical models
2. Dynamic models

Logistical models are used primarily for studying long time performance, economic analysis, component sizing and prediction whereas dynamic models are used mainly for component design, assessment of system stability and power quality.

Wind generator, solar PV and small hydropower for distributed generation applications are explained in the following sections.

V. Small Hydro Power Turbine

In a hydropower system, the energy present in water is converted into mechanical or electrical energy by the use of hydropower plant. Generic hydro power systems can be categorized in many different ways. Some of the methods of classification are based on how the electricity is generated by the plant, what kind of grid system is utilized for the distribution of electricity, the type of load capacity and the type of storage used by the system.

Small hydro power plants are designed to generate electrical or mechanical power based on the demand for energy of the surrounding locality. In a typical SHS (Small Hydro-power System) the water from the source is diverted by weir through an opening intake into a canal (Fox, 2004) . A settling basin might sometimes be used to sediment.

Eign particles from the water. The canal is designed along the contours of the landscape available so as to preserve the elevation of the diverted water. The water then enters the fore-bay tank and passes through the penstock pipes which are connected at a lower elevation level to the turbine. The turning shaft of the turbine is then used to operate and generate electricity. The machinery or appliances which are energized by the hydro scheme are called the load.The power available in water current is proportional to the product of head and flow rate.

The general formula for any hydro power is

$$P_{hyd} = \rho g Q H \qquad (1)$$

P is the mechanical power produced at the turbine shaft (Watts), ρ is the density of water (1000 kg/m3), g is the acceleration due to gravity (9.81 m/s2), Q is the water flow rate passing through the turbine (m3/s), H is the effective pressure head of water across the turbine (m).

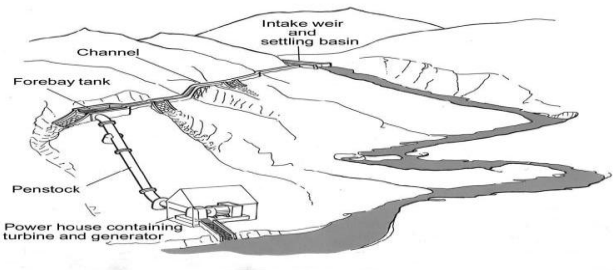

Figure 2 A typical SHS (Small Hydropower System)

VI. SOLAR POWER PLANT

Photovoltaic (PV) power systems convert sunlight directly into electricity. A residential PV power system enables a homeowner to generate some or all of their daily electrical energy demand on their own roof, exchanging daytime excess power for future energy needs (i.e. night time usage). The house remains connected to the electric utility at all times, so any power needed above what the solar system can produce is simply drawn from the utility. PV systems can also include battery backup or uninterruptible power supply (UPS) capability to operate selected circuits in the residence for hours or days during a utility outage.

In this early stage of marketing solar electric power systems to the residential market, it is advisable for an installer to work with well established firms that have complete, pre-engineered packaged solutions that accommodate variations in models, rather than custom designing custom systems. Once a system design has been chosen, attention to installation detail is critically important. Recent studies have found that 10-20% of new PV installations have serious installation problems that will result in significantly decreased performance. In many of these cases, the performance shortfalls could have been eliminated with proper attention to the details of the installation.

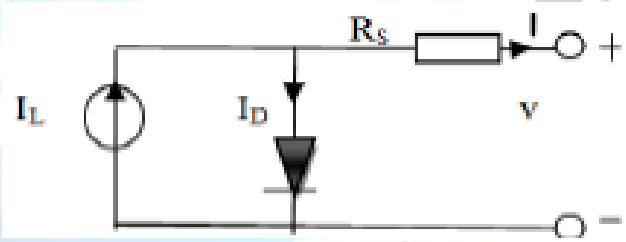

Figure 3 Model for single solar cell

The output terminal of the circuits is connected to the load. The output current source is the different between the photocurrent Iph and the normal diode current ID. Ideally the relationship between the output voltage V and the load current I of a PV cell or a module.

$$I_{pv} = I_{ph} - I_D = I_{ph} - I_o\left[\exp\left(\frac{V_{pv}+iRs}{mKT_c}\right) - 1\right.$$

Where Iph is the photocurrent of the PV cell (in amperes), I0 is the saturation current, Ipv is the load current (in amperes), Vpv is the PV output voltage(in volts), Rs is the series resistance of the PV cell (in ohms) and m, K and Tc represent respectively the diode quality constant, Boltzmann's constant and temperature.

PV effect is a basic physical process through which solar energy is converted directly into electrical energy. It consists of many cells connected in series and parallel. The voltage and current output is a nonlinear relationship. It is essential therefore to track the power since the maximum power output of the PV array varies with solar radiation or load current. This is shown by Matlab simulation.

Figure 4 Model Photovoltaic plates

VII. Wind Power Plant

Wind energy conversion systems is one of the challenges to achieve knowledge for the ongoing change due to the intensification of using wind energy in nowadays. This book chapter is an involvement on those models, but dealing with wind energy conversion systems consisting of wind turbines with permanent magnet synchronous generators (PMSG) and full-power converters. Particularly, the focus is on models integrating the dynamic of the system as much as potentially necessary in order to assert consequences on the operation of system.

In modelling the energy captured from the wind by the blades, disturbance imposed by the asymmetry in the turbine, the vortex tower interaction, and the mechanical eigen swings in the blades are introduced in order to assert a more accurate behaviour of wind energy conversion systems. The conversion system dynamic comes up from modelling the dynamic behaviour due to the main subsystems of this system: the variable speed wind turbine, the mechanical drive train, and the PMSG and power electronic converters. The mechanical drive train dynamic is considered by three different model approaches, respectively, one mass, two-mass or three-mass model approaches in order to discuss which of the approaches are more appropriated in detaining the behaviour of the system. The power electronic converters are modelled for three different topologies, respectively, two-level, multilevel or matrix converters. The consideration of these topologies is in order to expose its particular behaviour and advantages in what regards the total harmonic distortion of the current injected in the electric network. The electric network is modelled by a circuit consisting in a series of a resistance and inductance with a voltage source, respectively, considering two hypotheses: without harmonic distortion or with distortion due to the third harmonic, in order to show the influence of this third harmonic in the converter output electric current. Two types of control strategies are considered in the dynamic models of this book chapter, respectively, through the use of classical control or fractional-order control. Case studies were written down in order to emphasize the ability of the models to simulate new contributions for studies on grid-connected wind energy conversion systems.

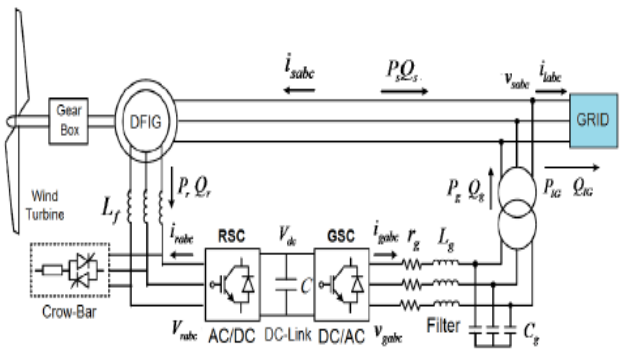

Figure 5 Configuration of a DFIG driven by a wind turbine

The general relations between wind speed and aerodynamic torque

$$T_t = \frac{1}{2}\rho\pi R^3 v^2 \frac{cp(\lambda,\beta)}{\lambda} \quad (3)$$

VIII. Transient Analysis of the System

Transient stability of a system is defined as the ability of the system to return back and

remain in its stable operating condition following a severe disturbance. In order to analyze the transient stability of the system certain stability indicators were chosen by means of which the stability of the system was accessed. The description of these indicators, different scenarios that were considered for the analysis and the procedure to analyze stability is explained in this section.

7.1 Transient Stability Indicators

In order to investigate the transient stability of the test system, certain indicators have to be selected which indicate stability. The indicators selected depend upon the type of stability that needs to be monitored. In this analysis the different stability indicators are selected based on references [13].

Terminal voltage -It is known that the voltage magnitude or phase of the system changes when there is a disturbance in the system. When a disturbance is applied to the system, the terminal voltage changes and when the fault is cleared it returns back to normal. A system is said to have better voltage stability if this change in voltage is less. Rotor speed deviation- It can be defined as the maximum change in the speed of the rotor of the machine when a disturbance is applied to the system. The degree of stability is analyzed based on the amount of deviation in the speed. The stability of a system in which the rotor speed deviation is less is considered better than a system in which the speed deviation is more.

IX. Procedure for Analyzing Transient Stability

A step by step has been followed to analyze the test system.

- A fault is applied at the bus where distributed generators were connected.
- Faults were applied for two different conditions with and without energy storage device respectively.
- The response of the system to the fault is analyzed by means of the transient stability indicator that was chosen.
- This procedure is repeated for different types of faults.
- The response of the indicators to the fault is analyzed for the system.

X. Results and Diccussion

For the technical analysis, MATLAB/ Simulink have been used. Simulink has been selected due to the reason that it is user-friendly and consists of a number of ready to use models. The power system components in the Simulink library include different types of generators, loads, transformers, faults and other components, which can be used to build and analyze the necessary test system. There are no built-in energy storage models in Simulink. Though there are no built-in models of energy storage, it can easily be built using the basic blocks that are present. The response of the selected indicators are monitored and recorded by means of the scope. Analysis is done both with and without energy storage device (Lithium-ion). This chapter presents the results of transient stability analysis with and without energy storage device. Two different fault conditions were considered for the stability analysis.

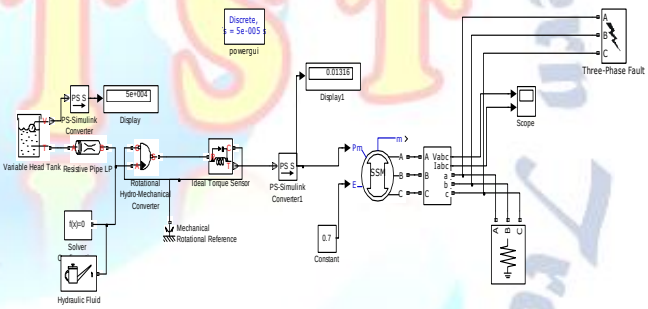

Figure 6 Simulation Hydro Power Plant

Simulation Circuit for Small Hydro Power plant

Figure 6 shows the small hydro power plant. A SLG fault is created at distribution level from 0.2 to 0.3 seconds.

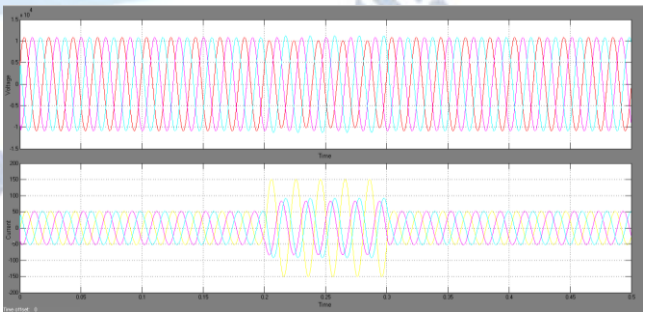

Fig 7 Voltage and Current waveform (Fault from 0.2 to 0.3 sec)

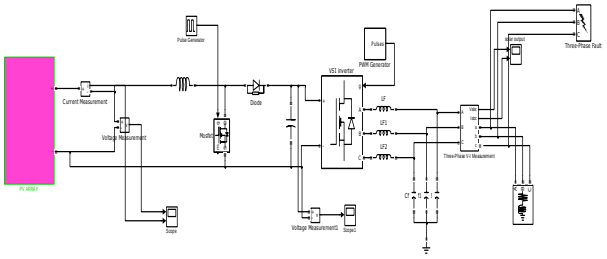

Fig 8 Simulation Circuit for Solar Power plant

Figure 8 shows the solar power plant. A SLG fault is created at distribution level from 0.4 to 0.7 seconds.

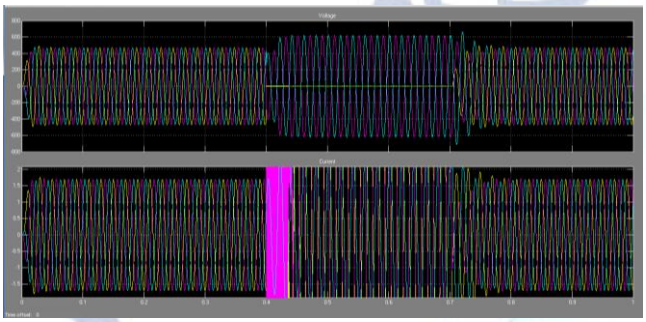

Fig 9 Voltage and Current waveform for SLG (Fault from 0.4 to 0.7 sec)

Fig 9 shows the voltage and current waveform. A single line to ground fault is created from 0.4 sec to 0.7 sec. Voltage observes a dip in the faulted phase and current wave observed a rise in that phase.

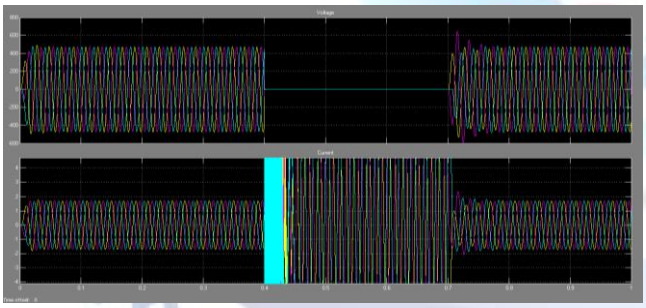

Fig 10 Voltage and Current waveform for Three phase fault (Fault from 0.4 to 0.7 sec)

Fig 9 shows the voltage and current waveform. A three phase fault is created from 0.4 sec to 0.7 sec. Voltage drops to zero and current rises to a very high value.

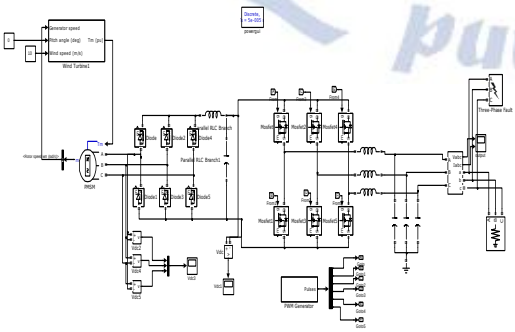

Fig 11 Simulation Circuit for Wind plant

Figure 11 shows the wind power plant. Different faults are created at distribution level from 0.3 to 0.4 seconds.

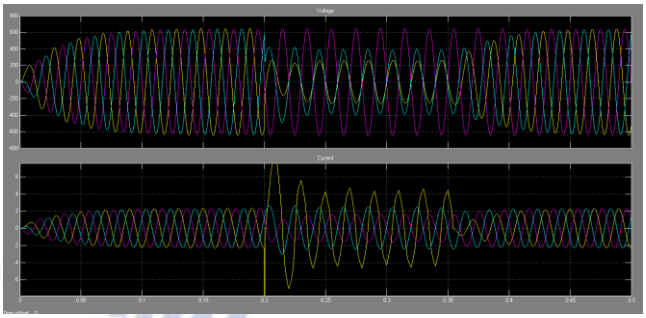

Fig 12 Voltage and Current waveform for SLG (Fault from 0.2 to 0.35 sec)

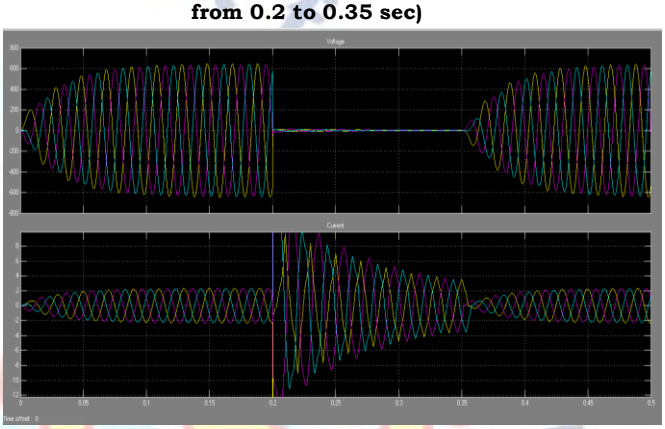

Fig 13 Voltage and Current waveform for three phase to ground fault (Fault from 0.2 to 0.35 sec)

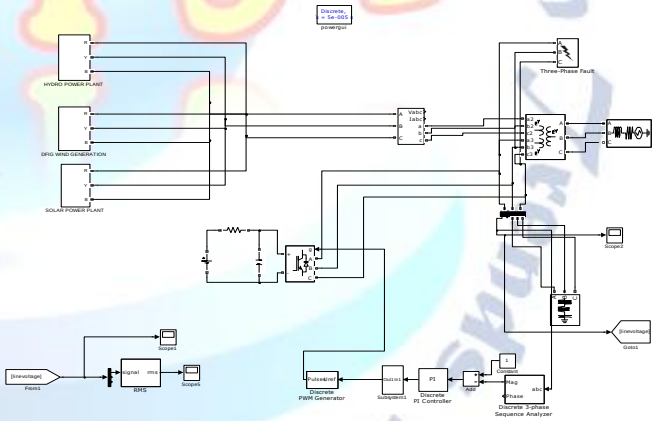

Fig 14 Simulation Circuit of Hybrid DG

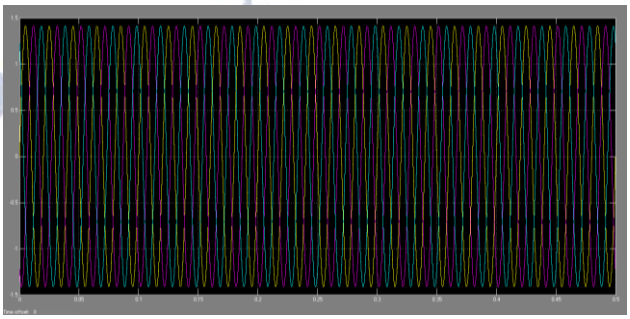

Fig 15 Voltage waveform for three phase to ground fault (Fault from 0.2 to 0.3 sec) with STATCOM

XI. Conclusion

Modeling and simulation of grid integrated Hybrid distributed generation is simulated . It majorly investigates the impact of various complimentary energy sources on the power system network. The test system is single machine infinite system with integrated HDG. The system was observed by using oscillation duration and critical clearing time. The final report shows that, as the number of generator increases the stress on the system also increases. However, the simulation shows that hybrid power system with three generator show a critical cases compared to two DG. The result shows that the impact depend on the network strength, level of penetration and the technologies involves

I have simulate the hydro wind solar power plant with alone and hybrid distributed system. Modeling and simulation is done with renewable source. The output of three power plant is couple and simulated. Hybrid distributed of Hydro Solar and Wind power plant is connect with AC Grid. The combination of three plant and outputs are shown in Mat lab simulation.

References

[1] J.Momoh, G.D.Boswell, "Improving power Grid Efficiency using Distributed Generation" Proceedings of the 7th international conference on power system operation and planning, pp.11-17, Jan., 2007

[2] T.Ackerman,G. Andersson, and L.Soder. 'Distributed generation, a definition' Electric Power Energy Research Vol,57, no3, pp195-204,2001.

[3] Distributed Generation and Cogeneration Policy Roadmap for California.

[4] A.M.Azmy, Simulation and Management of Distributed Generation units using intelligent techniques, Ph.D. Thesis submitted to the department electrical engineering University of Duisburg-Essen 2005.

[5] C.Wang, 'Modeling and control of hybrid wind/photovoltaic/fuel distributed generation system' PhD thesis Submitted to Montana State University Bozeman,Montana July 2006.

[6] V.V Thong, J. Driesen, R. Belmans, "Transmission system operation concerns with high penetration level of distributed generation", Universities power and Engineering Conference UPEC, pp.867-8717, 4-6Sept., 2007.

[7] T. Tran-Quoc, L.Le Thanh, Ch.Andrieu, N. Hadjsaid, C. Kieny, J.C Sabonnadiere, K.Le,O.Devaux,O.Chilard ';Stability analysis for the distribution networks with distributed generation" in *Proc.*2005/2006 IEEE/PES Transmission & Distribution Conference & Exposition, vol. 1–3, Dallas, TX, USA, May 21–26 Proceedings Paper, pp. 289–294. 2006.

[8] V.V. Knazkins "Stability of Power Systems with Large Amounts of Distributed Generation "PhD Thesis submitted to University Stockholm, Sweden, 2004.

[9] A Ishchenko 'Dynamics and stability of distributed networks with dispersed Generation, Ph.D thesis submitted to Eindho-ven University of technology,16 Jan.,2008.

[10] M. Reza, Stability analysis of transmissions Systems with high penetration of distributed generation", PhD Thesis submitted to Delf University of Technology Delft, The Netherlands, 2006.

[11] Y.Tiam, "Impact on the power system with a large generation of photovoltaic generation", PhD Thesis submitted to the University of Manchester Institute of Science and Technology, Feb., 2004, pp.53-55.