IJMTST

Volume: 2 | Issue: 07 | July 2016 | ISSN: 2455-3778

Comparison of Buck-Boost and Cuk Converters for BLDC Drive Applications with PFC

Neelam Amarnath Reddy[1] | V. Ganesh Kumar[2]

[1]PG Scholar, Department of Electrical & Electronics Engineering, Malla Reddy Engineering College, (Autonomous) Dulapally Rd., Maisammaguda, Kompally, Medchal (M), Rangareddy (Dt), Telangana, India.

[2]Associate Professor, Department of Electrical & Electronics Engineering, Malla Reddy Engineering College, (Autonomous) Dulapally Rd., Maisammaguda, Kompally, Medchal (M), Rangareddy (Dt), Telangana, India

ABSTRACT

The devices generally used in industrial, commercial and residential applications need to undergo rectification for their proper functioning and operation. Hence there is a need to reduce the line current harmonics so as to improve the power factor of the system. This has led to designing of Power Factor Correction circuits. This project presents a power factor corrected (PFC) bridgeless (BL) buck–boost converter-fed brushless direct current (BLDC) motor drive as a cost-effective solution for low-power applications. The conventional PFC scheme of the BLDC motor drive utilizes a pulse width-modulated voltage source inverter (PWM-VSI) for speed control with a constant dc link voltage. This offers higher switching losses in VSI as the switching losses increase as a square function of switching frequency. A BL configuration of the buck–boost converter is proposed which offers the elimination of the diode bridge rectifier, thus reducing the conduction losses associated with it. A PFC BL buck–boost converter is designed to operate in discontinuous inductor current mode (DICM) to provide an inherent PFC at ac mains. The simulation results are presented by using Matlab/Simulink software. The proposed concept can be extended with cuk converter for BLDC drive applications using Matlab/Simulink software

KEYWORDS: *Bridgeless (BL) Buck–Boost Converter, Brushless Direct Current (BLDC) Motor, Discontinuous Inductor Current Mode (DICM), Power Factor Corrected (PFC), Power Quality, CUK converter.*

I. Introduction

Efficiency and cost are the major concerns in the development of low-power motor drives targeting household applications such as fans, water pumps, blowers, mixers, etc. [1], [2]. The use of the brushless direct current (BLDC) motor in these applications is becoming very common due to features of high efficiency, high flux density per unit volume, low maintenance requirements, and low electromagnetic-interference problems [1]. These BLDC motors are not limited to household applications, but these are suitable for other applications such as medical equipment, transportation, HVAC, motion control, and many industrial tools [2]–[4]. A BLDC motor has three phase windings on the stator and permanent magnets on the rotor [5], [6]. The BLDC motor is also known as an electronically commutated motor because an electronic commutation based on rotor position is used rather than a mechanical commutation which has disadvantages like sparking and wear and tear of brushes and commutator assembly [5], [6].

Power quality problems have become important issues to be considered due to the recommended limits of harmonics in supply current by various international power quality standards such as the International Electrotechanical Commission (IEC) 61000-3-2 [7]. For class-A equipment (< 600 W, 16 A per phase) which includes household equipment, IEC 61000-3-2 restricts the harmonic current of different order such that the total harmonic distortion (THD) of the supply current should be

below 19% [7]. A BLDC motor when fed by a diode bridge rectifier (DBR) with a high value of dc link capacitor draws peaky current which can lead to a THD of supply current of the order of 65% and power factor as low as 0.8 [8]. Hence, a DBR followed by a power factor corrected (PFC) converter is utilized for improving the power quality at ac mains. Many topologies of the single-stage PFC converter are reported in the literature which has gained importance because of high efficiency as compared to two-stage PFC converters due to low component count and a single switch for dc link voltage control and PFC operation [9], [10].

The choice of mode of operation of a PFC converter is a critical issue because it directly affects the cost and rating of the components used in the PFC converter. The continuous conduction mode (CCM) and discontinuous conduction mode (DCM) are the two modes of operation in which a PFC converter is designed to operate [9], [10]. In CCM, the current in the inductor or the voltage across the intermediate capacitor remains continuous, but it requires the sensing of two voltages (dc link voltage and supply voltage) and input side current for PFC operation, which is not cost-effective. On the other hand, DCM requires a single voltage sensor for dc link voltage control, and inherent PFC is achieved at the ac mains, but at the cost of higher stresses on the PFC converter switch; hence, DCM is preferred for low-power applications [9], [10].

The conventional PFC scheme of the BLDC motor drive utilizes a pulse-width-modulated voltage source inverter (PWM-VSI) for speed control with a constant dc link voltage. This offers higher switching losses in VSI as the switching losses increase as a square function of switching frequency. As the speed of the BLDC motor is directly proportional to the applied dc link voltage, hence, the speed control is achieved by the variable dc link voltage of VSI. This allows the fundamental frequency switching of VSI (i.e., electronic commutation) and offers reduced switching losses. This paper presents a BL buck–boost converter fed BLDC motor drive with variable dc link voltage of VSI for imp roved power quality at ac mains with reduced components and superior control.

II. Conventional System

The proposed BL buck–boost converter based VSI fed BLDC motor drive is shown in fig.4. The parameters of the BL buck–boost converter are made such that it operates in discontinuous inductor current mode (DICM) to attain an inherent power factor correction at ac mains. The speed control of BLDC motor is accomplished by the dc link voltage control of VSI using a BL buck–boost converter. This reduces the switching losses in VSI because of the low frequency operation of VSI for the electronic commutation of the BLDC motor.

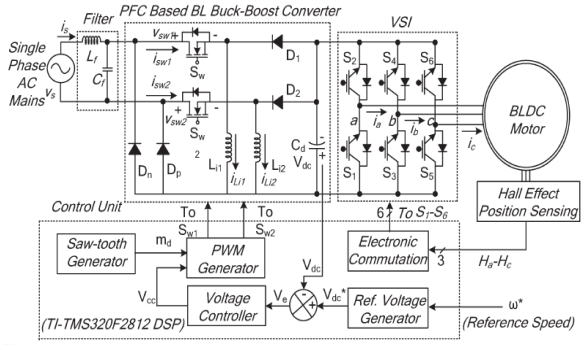

Fig.1. Block diagram of PFC based BL Buck-Boost converter fed BLDC motor drive

In the proposed arrangement of bridgeless buck help converter has the base number of parts and slightest number of conduction gadgets amid every half cycle of supply voltage which administers the decision of BL buck boost converter for this application. The operation of the PFC bridgeless buck-help converter is ordered into two parts which incorporate the operation amid the positive and negative half cycles of supply voltage and amid the complete exchanging cycle.

A. Operation during Positive and Negative Half Cycle of Supply Voltage

In this mode converter switches Sw1 and Sw2 are work in positive and negative half cycle of supply voltage individually. A mid positive half cycle switch SW1, inductor Li1 and diodes D1 and D2 are worked to exchange vitality to DC join capacitor Cd. Thus in negative half cycle of supply voltage switches Sw2, inductor Li2 and diode D2 In Irregular Inductor Current Mode(DICM) operation of converter the present in the inductor Li gets to be irregular for certain term in an exchanging period.

B. Operation during Complete Switching Cycle

In this exchanging cycle there are three methods of operation.

Mode I: In this mode, switch Sw1 conducts for charging the inductor Li1, thus the inductor current iLi1 increments in this mode. Diode D 1 finishes the information side and the DC join capacitor Cd is released by VSI nourished BLDC engine

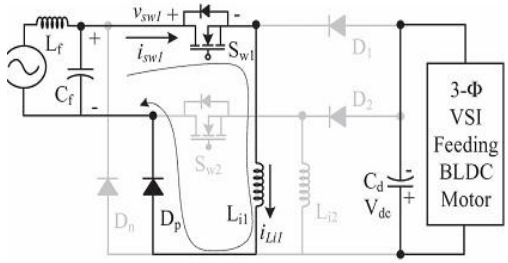

Fig.2. mode 1 operation

Mode II: In this method of operation switch Sw1 is killed furthermore, the put away vitality from the inductor Li1 is exchanged to DC join capacitor Cd till the inductor is completely released furthermore, current in the inductor is completely lessened to zero.

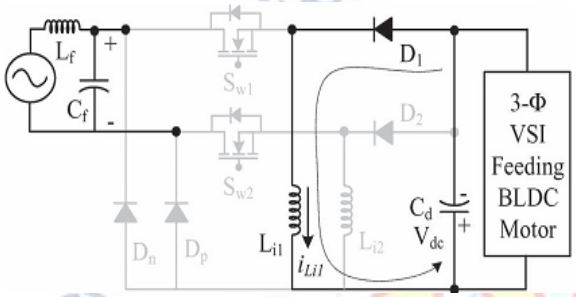

Fig.3. mode 2 operation

Mode III: In this method of operation inductor Li1 work in intermittent conduction mode and diodes and switch are in off condition. As of now DC jo in capacitor Cd begins releasing. This operation can be proceeding up to switch Sw1 is turned on once more.

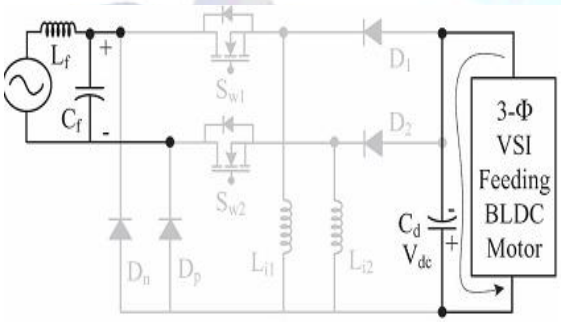

Fig.4. mode 3 operation

Similarly, for the negative half cycle of the supply voltage, switchSw2, inductor Li2, and diodes DnandD2operate for voltage control and PFC operation.

A PFC BL buck–boost converter is designed to operate in DICM such that the current in inductors *Li*1 and *Li*2 becomes discontinuous in a switching period. For a BLDC of power rating 251 W a power converter of 350 W (*Po*) is designed. For a supply voltage with an rms value of 220 V, the average voltage appearing at the input side is given as

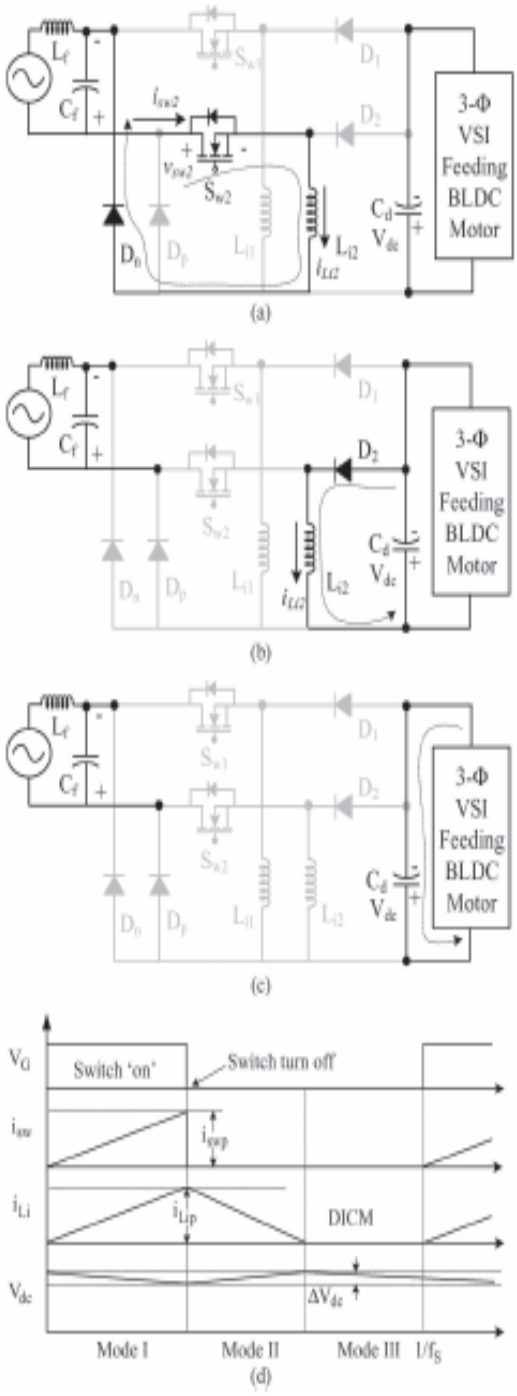

Fig.5 Operation of the proposed converter in different modes (a)–(c) for a negative half cycles of supply voltage and (d) the associated waveforms. (a)Mode I. (b) Mode II. (c) Mode III. (d) Waveforms during complete switching cycle.

III. Control of PFC BL Buck-Boost Converter –Fed BLDC Motor Drive

A. Control of Front-End PFC Converter: Voltage Follower Approach

The control of the front-end PFC converter generates the PWM pulses for the PFC converter switches (*Sw*1 and *Sw*2) for dc link voltage control with PFC operation at ac mains. A single voltage control loop (voltage follower approach) is utilized for the PFC BL buck–boost converter operating in

DICM. A reference dc link voltage (Vdc) is generated as

$$V_{dc}^{*} = k_v \omega^{*}$$

Where kv and $\omega*$ are the motor's voltage constant and the reference speed, respectively. The voltage error signal (Ve) is generated by comparing the reference dc link voltage (Vdc) with the sensed dc link voltage (Vdc) as

$$V_e(k) = V_{dc}^{*}(k) - V_{dc}(k)$$

where k represents the kth sampling instant.

This error voltage signal (Ve) is given to the voltage proportional–integral (PI) controller to generate a controlled output voltage (Vcc) as

$$V_{cc}(k) = V_{cc}(k-1) + k_p\{V_e(k) - V_e(k-1)\} + k_i V_e(k)$$

Where kp and ki are the proportional and integral gains of the voltage PI controller.

Finally, the output of the voltage controller is compared with a high frequency saw tooth signal (md) to generate the PWM pulses as

$$\text{For } v_s > 0; \quad \left\{ \begin{array}{l} \text{if } m_d < V_{cc} \text{ then } S_{w1} = \text{'ON'} \\ \text{if } m_d \geq V_{cc} \text{ then } S_{w1} = \text{'OFF'} \end{array} \right\}$$

$$\text{For } v_s < 0; \quad \left\{ \begin{array}{l} \text{if } m_d < V_{cc} \text{ then } S_{w2} = \text{'ON'} \\ \text{if } m_d \geq V_{cc} \text{ then } S_{w2} = \text{'OFF'} \end{array} \right\}$$

Where $Sw1$ and $Sw2$ represent the switching signals to the switches of the PFC converter.

B. Control of BLDC Motor: Electronic Commutation

An electronic commutation of the BLDC motor includes the proper switching of VSI in such a way that a symmetrical

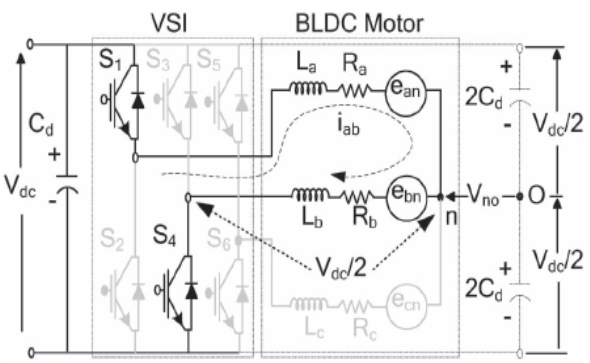

Fig.6 Operation of a VSI-fed BLDC motor when switches *S*1 and *S*4 are conducting.

TABLE I

SWITCHING STATES FOR ACHIEVING ELECTRONIC COMMUTATION OF BLDC MOTOR BASED ON HALL-EFFECT POSITION SIGNALS

θ (°)	Hall Signals			Switching States					
	H_a	H_b	H_c	S_1	S_2	S_3	S_4	S_5	S_6
NA	0	0	0	0	0	0	0	0	0
0-60	0	0	1	1	0	0	0	0	1
60-120	0	1	0	0	1	1	0	0	0
120-180	0	1	1	0	0	1	0	0	1
180-240	1	0	0	0	0	0	1	1	0
240-300	1	0	1	1	0	0	1	0	0
300-360	1	1	0	0	1	0	0	1	0
NA	1	1	1	0	0	0	0	0	0

Dc current is drawn from the dc link capacitor for 120◦ and placed symmetrically at the center of each phase. A Hall-effect position sensor is used to sense the rotor position on a span of 60◦, which is required for the electronic commutation of the BLDC motor. The conduction states of two switches ($S1$ and $S4$) are shown in Fig. 5. A line current $i$ab is drawn from the dc link capacitor whose magnitude depends on the applied dc link voltage (Vdc), back electromotive forces (EMFs) ($e$an and $e$bn), resistances (Ra and Rb), and self-inductance and mutual inductance (La, Lb, and M) of the stator windings. Table II shows the different switching states of the VSI feeding a BLDC motor based on the Hall-effect position signals (Ha – Hc). A brief modeling of the BLDC motor is given in the Appendix.

IV. Operation of CUK Converter in Different Modes

The operation of Cuk converter is studied in four different modes of CCM and DCM. In CCM, the current in inductors (Li and Lo) and voltage across intermediate capacitor C1 remain continuous in a switching period [33]. Moreover, the DCM operation is further classified into two broad categories of discontinuous inductor current mode (DICM) and discontinuous capacitor voltage mode (DCVM). In DICM, the current flowing in inductor Li or Lo becomes discontinuous in their respective modes of operation [31, 32]. While in DCVM operation, the voltage appearing across the intermediate capacitor C1becomes discontinuous in a switching period [34, 35]. Different modes for operation of CCM and DCM are discussed as follows.

A. CCM Operation

The operation of Cuk converter in CCM is described as follows. Figs.3 (a) and (b) show the operation of Cuk

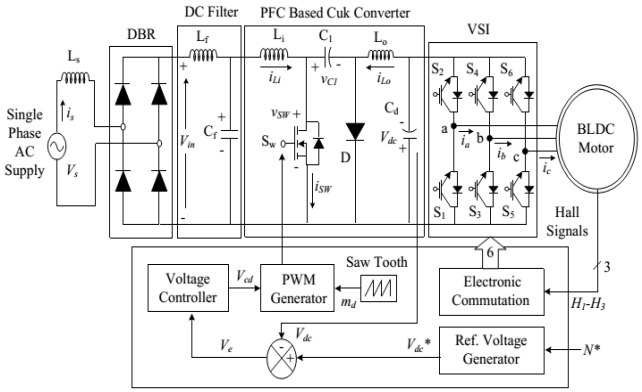

Fig.7 A BLDC Motor Drive Fed by a PFC Cuk Converter Using a Voltage Follower Approach.

Converter in two different intervals of a switching period and the associated waveforms in a complete switching period. Interval I: When switch Swim turned on, inductor LI stores energy while capacitor C1discharges and transfers its energy to DC link capacitor C d Input inductor current iLi increases while the voltage across the intermediate capacitor VC1 decreases. Interval II: When switch Swiss turned off, then the energy stored in inductor Lo is transferred to DC link capacitor Cd, and inductor Li transfers its stored energy to the intermediate capacitor C1 The designed values of Li, Lo and C1are large enough such that a finite amount of energy is always stored in these components in a switching period.

B.DICM (Li) Operation

The operation of Cuk converter in DICM (Li) is described as follows. the operation of Cuk converter in three different intervals of a switching period and the associated waveforms in a switching period. Interval I: When switch Swim turned on, inductor Li stores energy while capacitor C1discharges through Switch Sw to transfers its energy to the DC link capacitor C d as shown in Fig.4 (a). Input inductor current iLi increases while the voltage across the capacitor C1 decreases as shown in Fig.4 (d). Interval II:When switch Swiss turned off, then the energy stored in inductor Li is transferred to intermediate capacitor C1 via diode D, till it is completely discharged to enter DCM operation. Interval III: During this interval, no energy is left in input inductor Li, hence current I Latecomers zero. Moreover, inductor cooperates in continuous conduction to transfer its energy to DC link capacitor Cd.

C. DICM (Lo) Operation

The operation of Cuk converter in DICM (Lo) is described as follows. Figs.5(a)-(c) show the operation of Cuk converter in three different intervals of a switching period and Fig.5(d) shows the associated waveforms in a switching period. Interval I: As shown in Fig.5(a), when switch Swim turned on, inductor L stores energy while capacitor C1discharges through switch Sw to transfer its energy to the DC link capacitor Cd. Interval II: When switch Swiss turned off, then the energy stored in inductor Li and Lo is transferred to intermediate capacitor C1and DC link capacitor Cd respectively. Interval III: In this mode of operation, the output inductor Lo is completely discharged hence its current iLo becomes zero. An inductor Li operates in continuous conduction to transfer its energy to the intermediate capacitor C 1 via diode

D. DCVM (C1) Operation

The operation of Cuk converter in DCVM (C1) is described as follows. Figs.6(a)-(c) show the operation of Cuk converter in three different intervals of a switching period and Fig. 6(d) shows the associated waveforms in a switching period. Interval I: When switch Swim turned on as shown in Fig.6 inductor L Is tares energy while capacitor C1discharges through switch Sw to transfer its energy to the DC link capacitor Cd as shown in Fig.6 (d). Interval II: The switch is in conduction state but intermediate capacitor C1is completely discharged, hence the voltage across it becomes zero. Output inductor Lo continues to supply energy to the DC link capacitor. Interval III: As the switch Sw is turned off, input inductor L I starts charging the intermediate capacitor, while the output inductor Lo continues to operate in continuous conduction and supplies energy to the DC link capacitor.

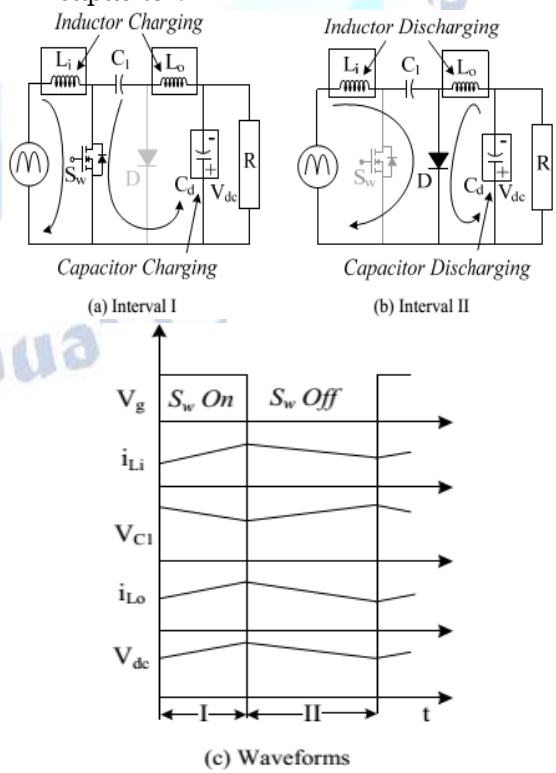

Fig.8 Operation of Cuk converter in CCM during (a-b) different intervals of switching period and (c) the associated waveforms.

V. MATLAB/SIMULINK RESULTS

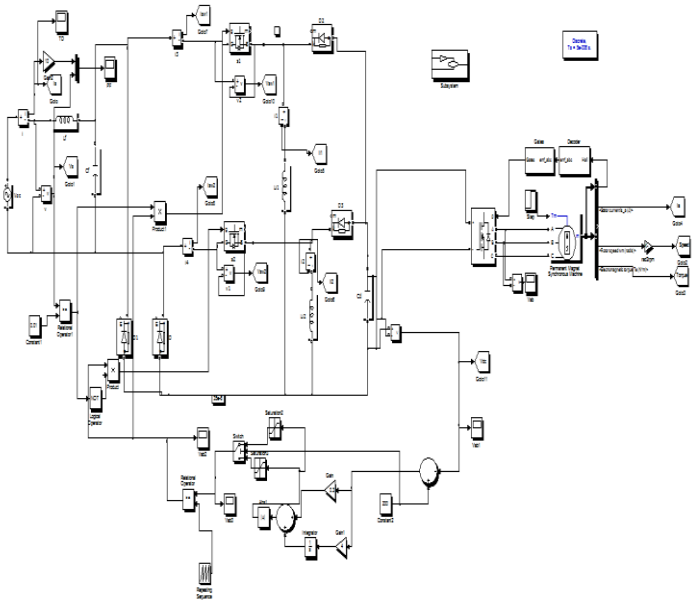

Fig.9.Simulink circuit for BLDC drive with bridgeless PFC based buck boost converter

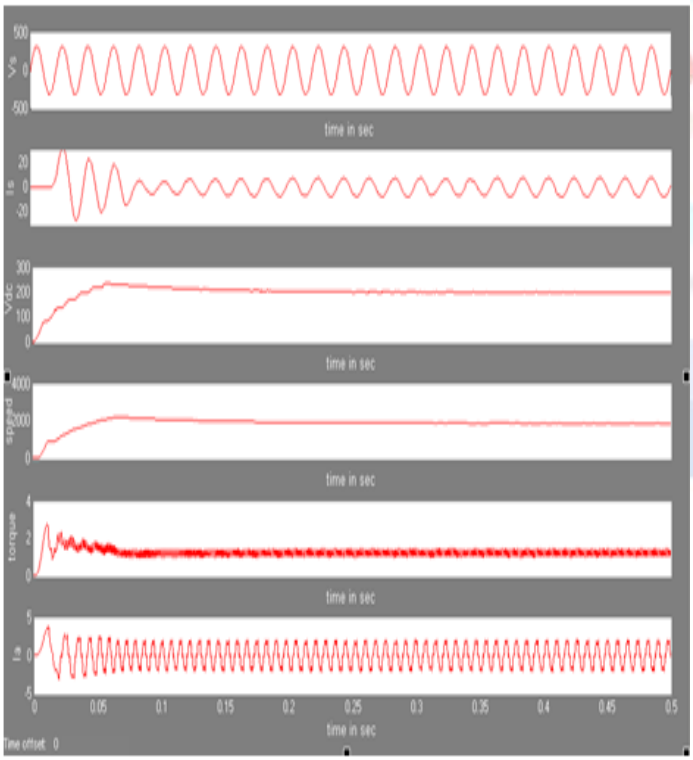

Fig.10.Siumulation results for source voltage, current, dc link voltage, and speed , torque, stator current of BLDC motor under steady state peformance

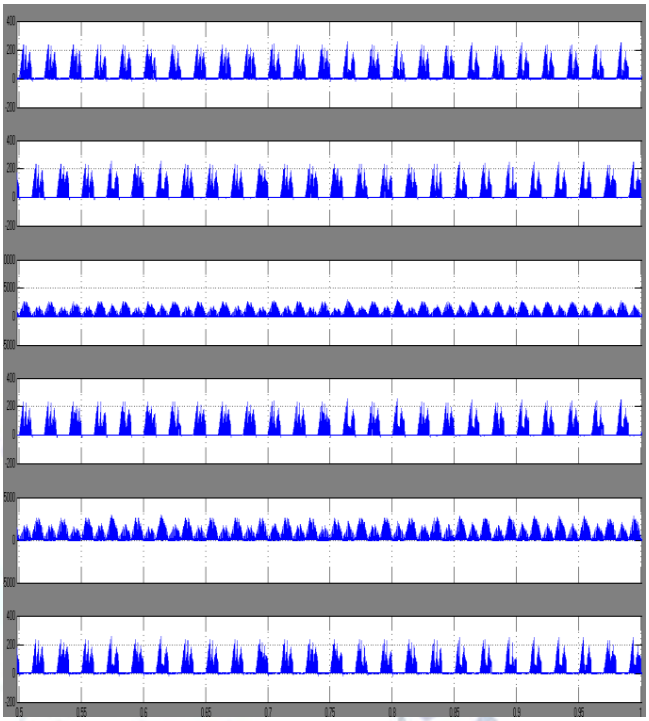

Fig.11.Simulation results for i_{Li1}, i_{Li2}, V_{sw1}, i_{sw1}, V_{sw2}, i_{sw2} of PFC converter under steady state performance

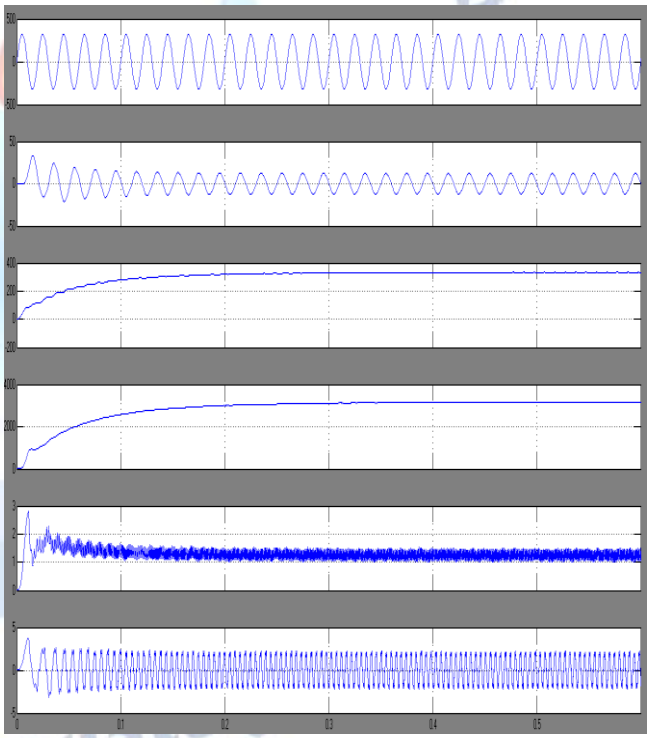

Fig.12.Simulation result of dynamic performance of system during starting

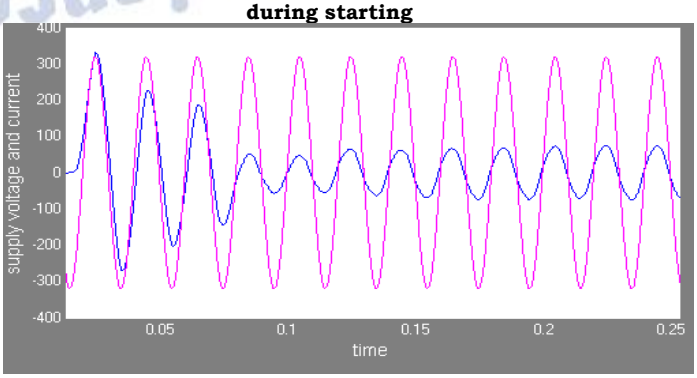

Fig.13.shows the simulation of input power factor.

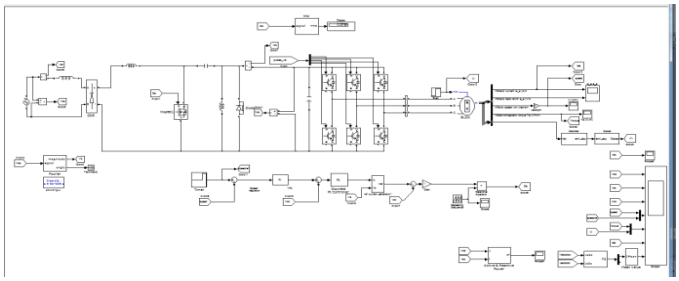

Fig.14.Simulink Circuit for Proposed System By Using CUK Converter.

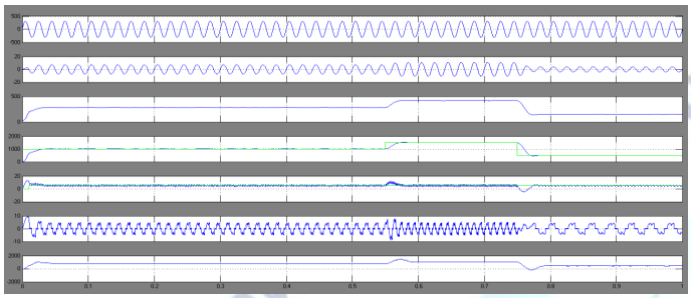

Fig.15 simulation wave form of voltage, current and speed, torque and also line current

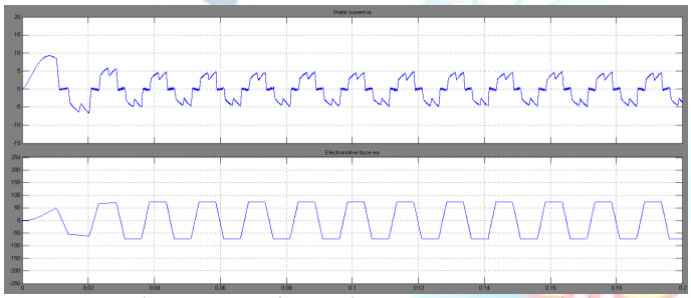

Fig 16 simulation wave form of stator current and electro motion force

VI. Conclusion

A PFC based BL buck–boost converter-based VSI-fed BLDC motor drive using CUK converter has been proposed targeting low-power applications. A new method of speed control has been utilized by controlling the voltage at dc bus and operating the VSI at fundamental frequency for the electronic commutation of the BLDC motor for reducing the switching losses in VSI. The front-end BL buck–boost converter has been operated in DICM for achieving an inherent power factor correction at ac mains. A satisfactory performance has been achieved for speed control and supply voltage variation with power quality indices within the acceptable limits of IEC 61000-3-2. Moreover, voltage and current stresses on the PFC switch have been evaluated for determining the practical application of the proposed scheme. By comparing the both the controllers with their THD's observe that using CUK converter.

Appendix

BLDC Motor Rating: four poles, Prated (rated power) = 251.32 W, Vrated (rated dc link voltage) = 200 V, Trated (rated torque) = 1.2 N · m, ωrated(rated speed)=2000 r/min, Kb(back EMF constant) = 78 V/kr/min, Kt(torque constan= 0.74 N · m/A, Rph (phase resistance) = 14.56 Ω, Lph (phaseinductance) = 25.71 mH, and J (moment of inertia)= 1.3 ×10−4 N·m/A2

Appendixes, if needed, appear before the acknowledgment.

References

[1] G. Sakthival, T.S. Anandhi and S.P. Natarjan. 2010. Real time imp lementation of DSP based CUK logic controller for Speed control of BLDC motor. International Journal of Co mputer Applications (0975 - 8887). 10(8).

[2] K. Naga Su jatha, K. Vaisakh and Anand. G. 2010. Artificial Intelligence based speed control of brushless DC motor. IEEE 978- 1- 4244-6551-4/10.

[3] 2003. AN885 - Brushless DC (BLDC) Motor Fundamentals. Microchip Technology Inc.

[4] R. Akkaya, A.A. Kulaksız, and O Aydogdu, DSP implementation of a PV system with GA -MLP- NN based MPPT controller supplying BLDC motor drive, Energy Conv. and Management 48, 210 -218, 2007.

[5] P. Pillay and R. Krishnan, Modeling, simu lation, and analysis of permanent -magnet motor drives, part II: the brushless DC motor drive, IEEE Trans. on Industry Applications 25, 274–279, 1989.

[6] P.D. Evans and D. Brown, Simu lation of brushless DC drives, Proc. o f the IEE 137, 299– 308, 1990.

[7] R. Carlson, M. Lajoie -Mazenc, and C.D.S. Fagundes, Analysis of torque ripple due to phase commutation in brushless DC machines, IEEE Trans. on Industry Applications 28, 632–638, 1992.

[8] S.K. Safi, P.P. Acarnley, and A.G. Jack, Analysis and simu lation of the high -speed torque performance of brushless DC motor drives, Proc. of the IEE 142, 191–200, 1995.

[9] J. Figueroa, C. Brocart, J. Cros, and P. Viarouge , Simp lified simulation methods for polyphase brushless DC motors, Mathematics and Co mputers in Simu lation 63, 209–224, 2003.

[10] C.W. Hung; C.T. Lin, and C.W. Liu, An Efficient Simu lation Technique for the Variable Samp ling Effect of BLDC Motor Applications, IECON 2007, pp. 1175– 1179, 2007.