As per UGC guidelines an electronic bar code is provided to seure your paper

International Journal for Modern Trends in Science and Technology, 9(05): 468-471, 2023

ISSN: 2455-3778 online
DOI: https://doi.org/10.46501/IJMTST0905079
Available online at: http://www.ijmtst.com/vol9issue05.html

Smart Hybrid Vehicles

V.Devika | N.Harini | S.Keerthi | Sk.Shameem | Sk.Maimuna

Department of ECE, Narayana Engineering College, Gudur, AP, India

To Cite this Article
V.Devika, N.Harini, S.Keerthi, Sk.Shameem and Sk.Maimuna. Smart Hybrid Vehicles. International Journal for Modern Trends in Science and Technology 2023, 9(05), pp. 468-471. https://doi.org/10.46501/IJMTST0905079

Article Info
Received: 16 April 2023; Accepted: 10 May 2023; Published: 18 May 2023.

ABSTRACT

Energy crisis and pollution caused by vehicle emissions are one of the most important issues in the present society.Due to the charging time of battery of electric vehicle, requirement of charging on board is explored as option.This project deals with the design of a hybrid model of a solar and wind, which uses the battery assists storage system. This system allows the two sources to supply the load separately or simultaneously depending on the availability of the energy sources.The power generated from the wind and solar is fluctuating in nature. Here we are using 12V, 1-Amp solar panel and maximum wind energy during the vehicle moving condition it produces 12V, 1-Amp totally it produces 12 Watts per hour.For full charge of battery it takes 4-Hours. Along with these parameters we are including some more features like normal accidents detection using Vibration sensor, GPS and GSM Modem .It sends the information automatically using IOT Technology and it runs with the help of generated power from natural resources without emitting any flue gases. By using these types of smart hybrid vehicle, we can save our environment and resources.

KEYWORDS:Hybrid Electric Vehicle, Solar energy , Wind energy , GSM module, GPS Modem, Vibration Sensor, .Ardinuo UNO

1.INTRODUCTION

This paper proposes a Hybrid Electric Vehicle (HEV) system which solves the major problems of fuel and pollution. The hybrid system has been designed and installed to generate power which combines wind turbine and solar panel. The hybrid model system is renewable energy system, which helps conserve energy by reducing the use of fuel in vehicle. Hence developing a new method for the economical evaluation of Hybrid Systems for electricity production. The basic principle of solar vehicle is to use energy that is stored in a battery during and after charging it from a solar panel. Power generated by renewable energy sources has recently become one of the most promising solutions for the electrification of remote rural areas. To overcome this weakness, Solar Energy combined with wind energy. The charged batteries are used to drive the motor which serves here as an engine and moves the vehicle. This idea, in future, may help to protect our fuels from getting extinguished and also this Vehicle consists of GPS receiver, a GSM modem and a Vibration Sensor. If the Vehicle detects an accident, The GPS based Vehicle Tracking System is designed to find out the exact location of the vehicle and it intimates the position to the concerned authority about through an SMS. The System includes a GPS Modem that it retrieves the location of a Vehicle in terms of its longitude and latitude. The system uses Geographic position and time information from the GPS. The System allows to track the target in anytime and in any Weather conditions.

2. LITERATURESURVEY

SujidhaPonnaiah, R A Usha, S.Niraimathi, A.Devi "Smart Hybrid Vehicle" February 2022 InternationalJournal for Modern Trends in Science and Technology 8(2):184-187: This paper proposes a Hybrid Electric Vehicle (HEV) system which solves the major problems of fuel and pollution. The renewable energy is vital for today's world as in near future the nonrenewable sources that we are using are going to get exhausted. Wind power is clean and sustainable natural resources that has yet to be fully utilized in the automotive industry.Also the sun is probably the most important source of renewable energy available today. The hybrid system has been designed and installed to generate power which combines wind turbine and solar panel. The hybrid model system is renewable energy system, which helps conserve energy by reducing the use of fuel in vehicle. Hence developing a new method for the economical evaluation of Hybrid Systems for electricity production.The hybrid electric vehicle is a step in saving these non renewable sources of energy. The basic principle of solar vehicle is to use energy that is stored in a battery during and after charging it from a solar panel. Power generated by renewable energy sources has recently become one of the most promising solutions for the electrification of islands and remote rural areas. But high dependency on weather conditions and the unpredictable nature of these renewable energy sources are the main drawbacks. To overcome this weakness,Solar Energy combined with wind energy. The charged batteries are used to drive the motor which serves here as an engine and moves the vehicle in reverse or forward direction. This idea, in future, may help to protect our fuels from getting extinguished.

Mradul Tiwari, Himanshu Garg, Rahul Kumar Tiwari, Swastik Gupta, Alok Kumar Yadav, Abhay Deep, MeenakshiJha "Implementation of Accident Vehicle Tracking System "Conference Paper March 2015:This paper proposes a quite efficient smart phone based accident detection and notification system which will track the accident with the help of deployed impact sensors, will process the data through microcontroller unit and then with a Smartphone app GPS, GSM it will send a notification to the nearest emergency services and to the victim's family.

1. Pham Hoang Oat, MichealDrieberg and Nguyen ChiCuong "Development of vehicle tracking system using GPS and GSM modem" Conference: 2013 IEEE Conference on Open Systems (ICOS):This paper presents the development of the vehicle tracking system's hardware prototype.

Specifically, the system will utilize GPS to obtain a vehicle's coordinate and transmit it using GSM modem to the user's phone through the mobile network. The main hardware components of the system are u-blox NEO-6Q GPS receiver module, u-blox LEON-G100 GSM module and Arduino Uno microcontroller. The developed vehicle tracking system demonstrates the feasibility of near real-time tracking of vehicles and improved customizability, global operability and cost when compared to existing solutions.

Fleschier, Paul, Nelson, Atso Yao, Robert AdjeteySowah "Design and development of GPS/GSM based vehicle tracking and alert system" Adaptive Science Technology (ICAST), 2012 IEEE: In this paper we proposed the design, development and deployment of GPS (Global Positioning System)/GSM(GlobalSystem for Mobile Communications) based Vehicle Tracking and Alert System which allows inter-city transport companies to track their vehicles in real-time and provides an alert system for reporting armed robbery and accident occurrences.

L.Vijayaraja, R.Dhanasekhar, R.Magesh Krishna, M.Mahidhar "A low cost and user friendly vehicle crash alert system using arduino" IOP Conference Series Materials Science and Engineering 1055(1):012061: This paper is aimed at developing a vehicle crash detection system using Arduino, GPS, GSM and accelerometer. Accelerometer detects the sudden change in the axes of vehicle and GSM module sends the alert message on your mobile phone with the location of the accident. Location of accident is sent in the form of Google ap link, derived from the latitude and longitude from GPS module. The message also contains the speed of vehicle in kilometers per hour. The proposed model can also be used as a tracking system and much more, by just making few changes in hardware and software. The alert system has been developed in real time and performance is discussed.

3. EXISTING METHOD

In Existing System,There are 2 methods a)Manual detection system.
b)Driver initiated detection system. 1)
Manual detection system.
In this method, accident is detected from

- Motorist report.
- Transportation department.
- Public Crew Report.
- Aerial Surveillance.

2) **Driver initiated detection system.**

Driver initiated incident detection system has more advantages than Manual detected system which includes the quick reaction, more incident information such as location etc.

4. PROPOSED SYSTEM

Apart from the solar panel, to make a sufficient solar vehicle we have used energy efficient components like Arduino, Motor driver IC (L293D), Solar Charge Controller, Wi-fi module, Battery. We have tried to make a lightweight mini vehicle having a chassis and other mechanical components bolted on it. We have used 200 rpm DC Geared motors for the faster movement and heavier loads. One motor on the left and the One motor on the right are connected in series with each other so that they can be simultaneously moving.

The Code is flashed into the Arduino before bolting. Whenever the vehicle is in presence of sunlight, the battery starts getting charged, else it provides power to the load from the stored energy. We have set a threshold in charge controller at 10.3 V so that whenever the voltage comes down under this value, the battery low led will glow and power to load gets terminated to prevent the battery from over-discharging. Through a DC connector, Arduino is connected to the load port of the charge module. Here, Arduino has the dynamic uses. We are getting 12V voltage from the load port of the charge controller into Arduino.

The Motor driver gets the power from the Vin pin of the Arduino and it further distributes energy to the two motors connected to it, whereas wifi module takes power anywhere between (3.3V-5V) from the 5V pin present on the Arduino. We have used L293D Motor driver. This is a controller. L293D is an IC which amplify the current. Actually, Motor driver is used to controlling the dc motor. And this Vehicle using GPS, GSM and Vibration Sensor. Vibration Sensor detects the sudden change in the axes of vehicle and GSM module send the alert message on your Mobile Phone with the location of the accident.

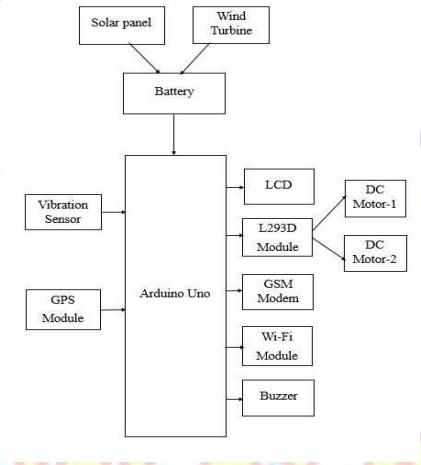

Block Diagram of the Vehicle

5. OUTPUT RESULTS

A. Output of the IOT Mode

In the IOT mode, we the Vehicle by using an Web page. Web page is created by using HTML, CSS, Javascript etc. By using this web page we can monitor the movement of the Vehicle. In the IOT Mode, webpage is not only monitories the movement but also the accident detection, location such as Longitude and Latitude etc. In Webpage ,there is an red coloured button if not button is red then a accident occurred in any someother place. if it is off and it is normal. When the Vehicle is experienced a accident or any sudden fluctuations, a GSM Module which we have incorporated in the project sends automatically a msg to the receiver using GPS Module with accurate google map location and the Vehicle is Automatically stops.

Figure :1.Overview of the Vehicle

Figure:2.GSMIntialising in the Vehicle

Figure:3. Location through GPS

Figure:4.Accident Detection in Vehicle

Figure:5.No Accident Detected in Vehicle

6. CONCLUSION

After making the Final completion of project it is found that project is in working condition. It is found that prototype captured the solar energy through Solar Panel and Wind energy through fan induced on it. There are huge potential for producing electricity from renewable sources. This paper gives a clear idea that vehicle powered with the help of Solar energy and Wind energy is more effective than fuel vehicle and this project also includes GSM, GPS module and a Vibration Sensor. GPS Module provides accurate location of the victim in the Vehicle.

7. FUTURE WORK

When the entire world is facing the issues with Petrol and the Gasoline prices are touching the sky. Hybrid vehicles have come up as a promising and a feasible option to cope with the situation. The use of hybrids is being encouraged by many governments in the world.

Conflict of interest statement

Authors declare that they do not have any conflict of interest.

REFERENCES

[1] SujidhaPonnaiah, R A Usha, S Niraimathi, A Devi "Solar and Wind Powered Electric Vehicle".February 2022 International Journal for Modern Trends in Science and Technology 8(2):184-187

[2] Mradul Tiwari, Himanshu Garg, Rahul Kumar Tiwari, Swastik Gupta, Alok Kumar Yadav, Abhay Deep, MeenakshiJha "Implementation of Accident Vehicle Tracking System "Conference Paper • March 2015

[3] Pham Hoang Oat, MichealDrieberg and Nguyen Chi Cuong "Development of vehicle tracking system using GPS and GSM modem" Conference: 2013 IEEE Conference on Open Systems (ICOS)

[4] Fleschier, Paul, Nelson, Atso Yao, Robert AdjeteySowah"Design and development of GPS/GSM based vehicle tracking and alert system" Adaptive Science Technology (ICAST), 2012 IEEE

[5] L.Vijayaraja, R.Dhanasekhar, R.MageshKrishna, M.Mahidhar"A low cost and user friendlyvehicle crash alert system using arduino" IOP Conference Series Materials Science and Engineering 1055(1):012061