International Journal for Modern Trends in Science and Technology, 8(S06): 127-130, 2022

ISSN: 2455-3778 online
DOI: https://doi.org/10.46501/IJMTST08S0718
Available online at: https://www.ijmtst.com/vol8si07.html

Design and Analysis of the Multi-Angled Gearless Trasmission System Using Different Materials

Alok Kumar, M. Venkata Jagadeesh, E. Issach, B. Prasadu, L. Praveen

Department of Mechanical Engineering, Godavari Institute of Engineering and Technology(A), JNTUK, Kakinada.

To Cite this Article
Alok Kumar, M. Venkata Jagadeesh, E. Issach, B. Prasadu and L. Praveen. Design and Analysis of the Multi-Angled Gearless Trasmission System Using Different Materials. International Journal for Modern Trends in Science and Technology 2022, 8(S06), pp. 127-130. https://doi.org/10.46501/IJMTST08S0718

Article Info
Received: 26 April 2022; Accepted: 24 May 2022; Published: 30 May 2022.

ABSTRACT

Generally we are using gears for power transmission. But the major problem faced by this technology is wear and tear and complex design. The Project is used for power transmission without gears. And it is called as Gearless transmission system. It is using nut bolt arrangement for rod at different angles power transmission. It is a straight forward procedure, but it is more effective. It is easy to manufacture. This saves gear manufacturing time and costs along with teeth matching and gear placement issues. This mechanism is an efficient design of gearless transmission technique and the kinematic system that allows for efficient power/motion transmission at acute and abuse angles.

The stress analysis on rod at different angles i.e., at 0, 30, 60 and 90 degrees is to be observed to obtain the safe conditions and also observed deformation analysis on the link. The stress and strain analysis of links and also compared with different materials is analysed at same angles.

Power is transferred from the input shaft to the out put shaft through sliding links that creates a revolute pairwith the hub. Links bent at required angle slide inside the holes in the hub.

KEYWORDS: Power Transmission, Finite-Element-Analysis

1. INTRODUCTION

One of the most important design issues for a transmission system is power transmission. Gears are the most frequent power transmission devices used to transfer mechanical power from one location to another. They are located between two non-parallel shafts. Gears, on the other hand, are commonly regarded as the most efficient means of power transmission between shafts. The gear, on the other hand, is heavy and requires more power to transport the electricity from the power plant to the destination.

However, to maximise power transmission efficiency, these systems can only be employed under low loading conditions and with smaller components.There are two types of gearless transmissions: 1. Fixed angle transmission and 2. Flexible (or) multi-angled transmission.

Fixed angle transmission is when the mechanism can only transmit power when the shafts are aligned at a specific angle.In a multi-angle gearless transmission, power is transmitted between two shafts that change angles between operations (or are fixed in various angles before the operation begins.The mechanism was designed in CATIA V5 for 3D part design and assembly, and the analysis was done in ANSYS simulation software. Virtual design and analysis are the simplest, fastest and more efficeant wat to create first same of the design we desire to develope.

2. RELATED WORK

The current effort is primarily concerned with locating an alternative way of gear drives for various power transmission applications in various sectors. The gearless power transmission mechanism developed in this study can transmit power at varying angles between the driving and driven shafts, ranging from 0 to 180 degrees. To ensure that the system is feasible, it is modelled and analysed in CREO5.0.

During operation, the speed ratio of the output shaft to the input shaft remained at 1:1, according to the speed analysis. The design is safe under particular loading requirements, according to the von Mises stress analysis. According to the deformation study, the highest displacement occurred at the elbow links corner.The elbow link's failure index was examined. The inner curvature of a link is subjected to the largest likelihood of failure, according to the failure index analysis of the elbow link.

3. PROPOSED WORK

In this work, we argue that there will be major changes in the body as a result of material changes, which will affect the mechanism's efficiency and lifespan.As a result, we used aluminium, copper, and mild steel for the links in this project.This is done to see if changing the material leads in a better change in results than changing the material.Mild steel is a general purpose (or) most often used material for all basic and common parts all over the world.When compared to copper, aluminm and mild steel are less dense materials.. It is critical to take into account the product's ownweight for this mechanism because it can transfer more power and maximize productivity.

The mechanism has been divided into parts (links, hub, holde, and base) and will be designed and generated in CATIA V5.part.

The components will then be assembled in the product design (a functionality provided by CATIA V5 to assemble the developed elements) and constrain each other in a way that makes the mechanism vitually functional.

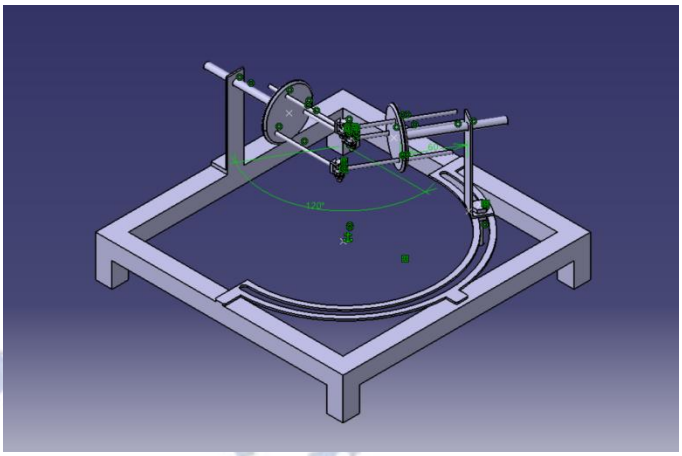

Figure 1: The Multi-Angle Gearless Transmission Assembly

This assembly will be converted to a format which is accessable by the ANSYS, and is will be imported as geometry in ANSYS for the further work. Static Stuctural analysis will be done to this mechanism which is a linear structural analysis developed on the logarithamic equations of finite-element analysis.

Then the imported geometry will be descritized to small tetrahedral cells to (which is known as meshing in analysis softwares). The input boundry conditions are given having 3000N-mm as the common torque applied to the input hub and the bottom face of the hub will be restrained (or) be selected as the fixed supports.

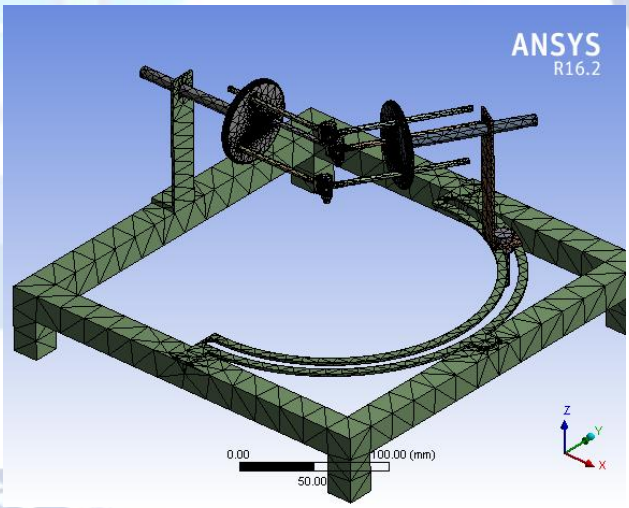

Figure 2: Mesh

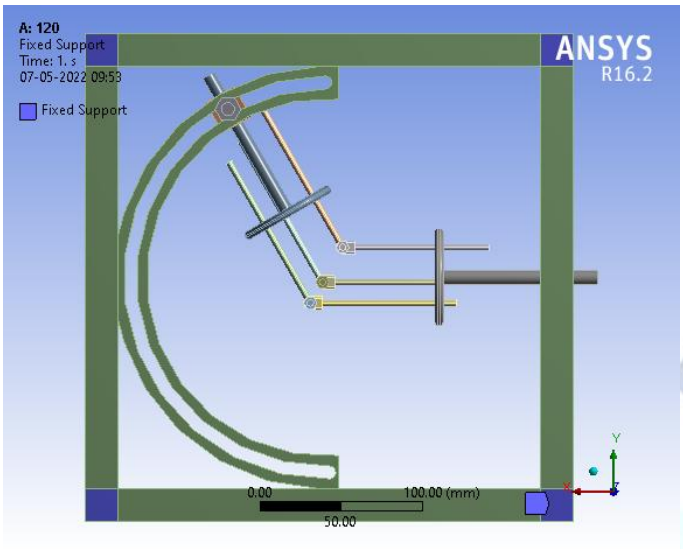

Figure 3: Boundray Conditions (Fixed Support)

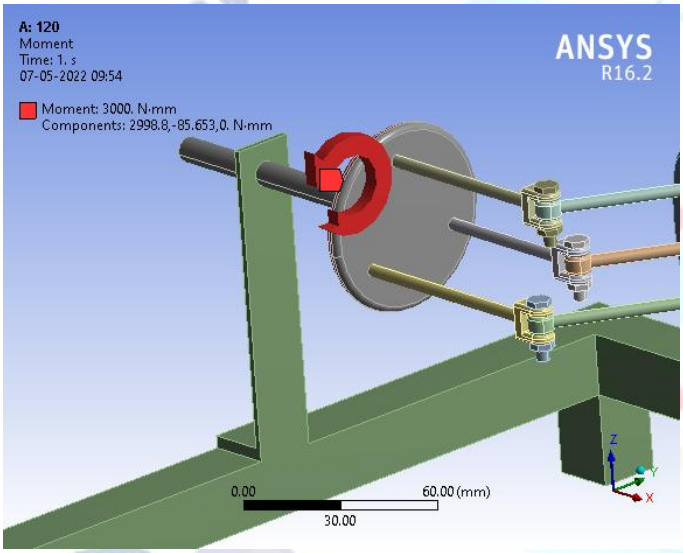

Figure 4: Load (or) Torque applicaion

4. RESULTS

The design parameters of the proposed structure are compared in this section with the different materials. The links have be updated with different material (i.e., aluminm, copper, and mild steel) and the obtaind results are compared.

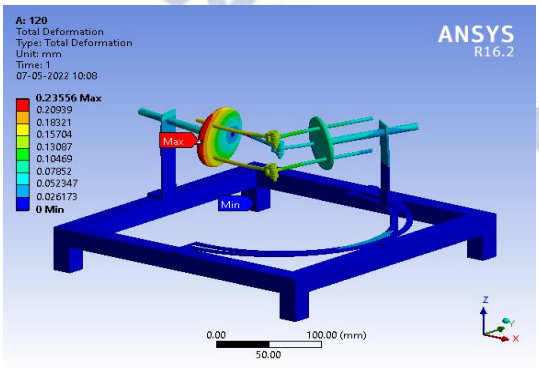

Figure 5: Deformations

We have compared Total deformation of the body, Equivalent stain, and Equivalent strain exerted by the assembly after appling the boundary conditions and solving in the Static Structural Analysis.

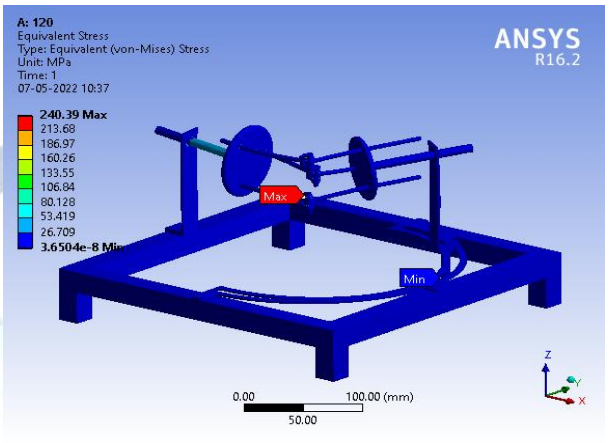

Figure 6: Equivalent stress

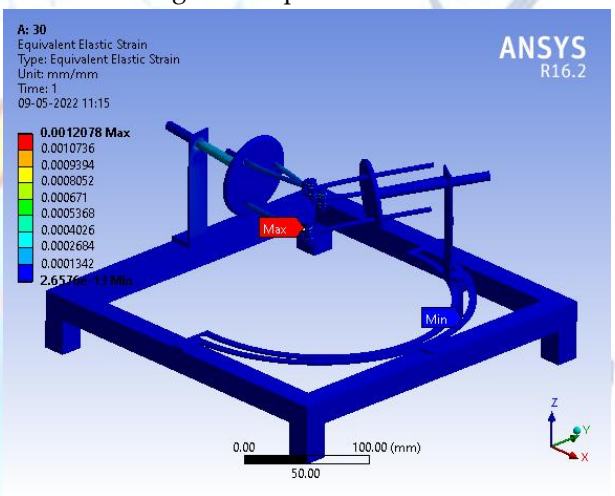

Figure 7: Equivalent strain

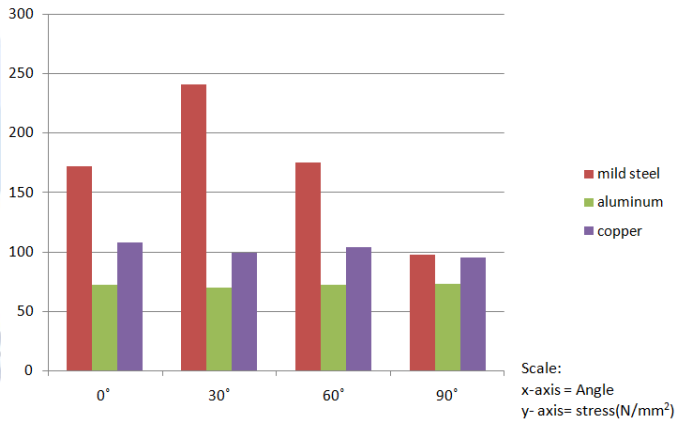

Stress chart

As it appears in the above presented chart themild steel is bearing maximum stresses compared to other two. Mild Steel having astresses of 172.3N/mm², 240.93N/mm², 175.19N/mm², 97.83N/mm²,Copper having108.23N/mm², 99.4N/mm², 103.96N/mm²,

95.59N/mm² and Aluminum having 72.53 N/mm², 69.49 N/mm², 72.38 N/mm², 73.14 N/mm²at respective 0°, 30°,60° ,90° angles, while

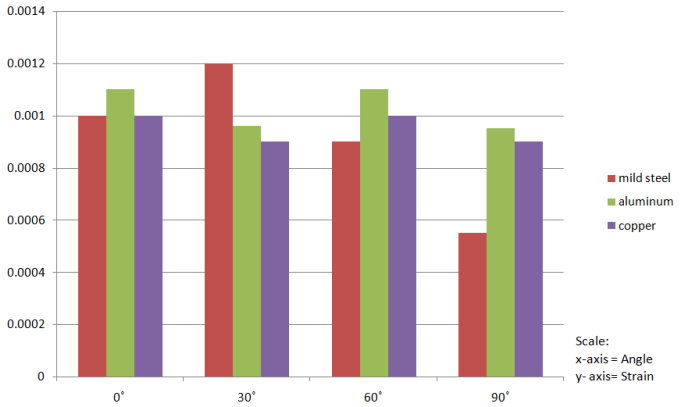

Strain chart

Aluminum has show a upper hand in the variation of strain. Steel having a strain of 0.001, 0.0012, 0.0009, 0.00054, copper having 0.001, 0.0009, 0.001, 0.0009 and aluminum having 0.0011, 0.00096, 0.0011, 0.0095 at respective 0°, 30°,60° ,90° angles, while

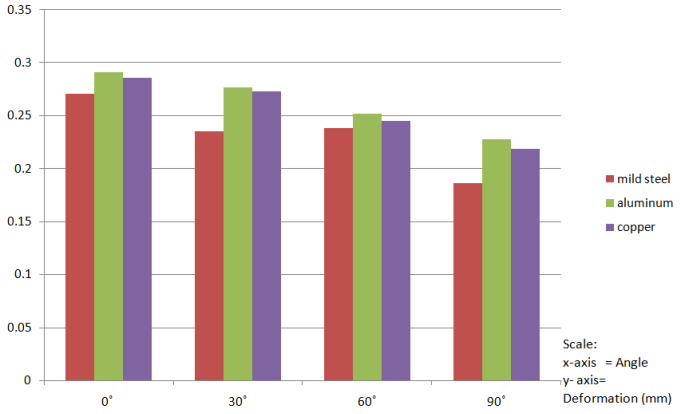

Deformation chart

As we have seen in the Strain chart Aluminum have more strain values than copper and steel, where the strain is directly proportional to the deformation. As it is shown in the graph aluminm deformed 0.291mm, 0.27mm, 0.252mm, 0.228mm , meanwhile copper with 0.286mm, 0.273mm, 0.245mm, 0.219mm and steel having 0.271mm, 0.235mm, 0.238, 0.186mm at respective 0°, 30°,60° ,90° angles, while

5. CONCLUSION

In the final conclusion of this study Mild steel performed significantly well in all aspects followed by copper, which is having a higher density compared to steel.For this type of mechanism or machinery which could be majorly used in a small scale transmission having a heavy component can be a major flaw. Unfortunately the mild steel is the one of heaviest metal that's available in the world. Compared to steel , copper have a higher density which has shown considerably less effectiveness and efficiency and similarly aluminum as well. However Aluminum is slightly behind the copper with negligible difference and have noticably low density compared to copper and mild steel (ie. aluminm density= 2,710 kg/m³, copper density = 8940 kg/m³, and mild steel density = 7860kg/m³). Hence on the consideration of self weight and effective performance and the cost of the material, aluminum would be the preferrable metal to replace the steel with.

Conflict of interest statement

Authors declare that they do not have any conflict of interest.

REFERENCES

[1] Johnson, A.S., Tapmatic Corp, 1966. Gearless transmission. U.S. Patent 3,227,005

[2] Wu, L. and Dong, M.W., 2014. Research on Transmission Principle of Gearless Reducer. Advanced Materials Research (Vol. 860, pp. 1744-1747). Trans Tech Publications Ltd.

[3] Shiv Pratap Singh Yadav, Sandeep G M,Rudra Naik, G C Keerthi Prakash, GauravKulkarni, Hemanth Kumar S, Thalanki GVamsi Krishna, "Design, Analysis and Fabrication of Gearless Power Transmissionby using Elbow Mechanism"

[4] Pawar, S.S., Naidu, A. and Vallabhaneni, P., Gearless Transmission through Elbow Mechanism. In International Conference on Emanations in Modern Engineering Science & Management (ICEMESM-2018).

[5] M. Lokesh, R. Ranjith Kumar, R. Revanth, K. Renugadevi and S. Ramesh, "Gearless Power Transmission Mechanism using 6 Elbow Rods" International Advanced Research Journal in Science, Engineering and Technology Vol. 4, Issue 6, June 2017

[6] Logesh, B., Raja, M.D., Gokul, R., Kumar, P.D. and Jithu, P.S., An Experimental Investigation to Design and Fabricate Gearless Transmission System for Power Transmission between Shafts.

[7] Mahantesh Tanodi, S. B. Yapalaparvi, Anand C. Mattikalli, D. N. Inamdar, "Gearless Power Transmission- L Pin Coupling" International Journal of Ethics in Engineering & Management Education Volume 1, Issue 5, May2014

[8] Rana, M.J. and Rahman, A.M.M., Development and Performance Test of Gearless Power Transmission System.

[9] Prof. B. Naveen Bardiya, T. karthik, L Bhaskara Rao "Analysis and Simulation of Gearless Transmission Mechanism", International Journal Of Core Engineering & Management (IJCEM) ,Volume 1, Issue 6, September 2014, Page.no: 136-142.

[10] R P Barot and D M Patel 2020 IOP Conf. Ser.: Mater. Sci. Eng. 872 012096 Design and analysis of multi-angular gearless transmission system.

[11] Prof R. Somraj, B. Sailesh , "Design and Fabrication of Gearless Power TransmissionFor Skew Shafts", International Research Journal of Engineering and Technology(IRJET) , Volume: 04 Issue: 04 | Apr -2017.