IJMTST is UGC Approved Journal with Journal Id: 43137

International Journal for Modern Trends in Science and Technology, 8(S05):149-153, 2022

ISSN: 2455-3778 online
DOI: https://doi.org/10.46501/IJMTST08S0526
Available online at: https://www.ijmtst.com/vol8si05.html

IOT Based Agriculture Robot

T.Ravindra | B.R.R.Asritha Lekha | S.Tanuj | D.Sai Prasanth | O.Venkatesh

Department of Electronics and Communication Engineering, Godavari Institute of Engineering and Technology(A), JNTUK, Kakinada.

To Cite this Article
T.Ravindra, B.R.R.Asritha Lekha, S.Tanuj, D.Sai Prasanth and O.Venkatesh. IOT Based Agriculture Robot. International Journal for Modern Trends in Science and Technology 2022, 8(S05), pp. 149-153. https://doi.org/10.46501/IJMTST08S0526

Article Info
Received: 26 April 2022; Accepted: 24 May 2022; Published: 30 May 2022.

ABSTRACT

Agriculture plays an important role in Indian economy. It provides food, feed and many other products for humans. So, it is a keystone for human existence. On the other hand, robotics plays an important role in the field of agriculture by performing various operations like harvesting, seeding, weeding, ploughing and many more. Agriculture robot is a electromechanical vehicle which is directed by dc motor to drive the vehicles. The purpose of agriculture robot is to perform tasks during initial stage of farming such as ploughing, seeding and water sprinkling. The humidity in the soil is tested by soil moisture sensor. This agriculture robot is controlled via Bluetooth.

Keywords: (Arduino UNO, Motor drivers, Dc Motor, Bluetooth Module, Relay, Battery, Soil moisture sensor)

1.INTRODUCTION

The Internet of Things (IoT) is a network of physical objects called "things" that are equipped with sensors, software, and other technologies in order to connect and exchange data with other devices and systems over the internet.

Agricultural robots are highly specialised pieces of technology that may aid farmers with a variety of tasks. They can evaluate, consider, and carry out a wide range of tasks, and they can be designed to grow and evolve to meet the demands of varied tasks.

The primary purpose of agricultural robots is to automate field activities, allowing farmers to focus on more vital jobs while saving time on mundane tasks. Seeding, harvesting, weed management, tilling, chemical application, and other applications are all possible with these robots.

Most countries in the current generation lack sufficient skilled manpower, particularly in the agricultural sector, which has a negative impact on developing countries' growth. As a result, it is the moment to automate the sector in order to solve this problem. In India, 70% of the population is reliant on agriculture. As a result, we must research agriculture. Our project's innovative idea is to automate the ploughing and sowing of seeds such as sunflower, corn, groundnut, and vegetables such as beans, lady's finger, pumpkin, and wheat seed, among others. To enhance yield while reducing human labour. The ploughing of the field and seed planting are done mechanically with the help of a dc motor.

Microcontrollers are used to control and vary the distance between the two seeds. With the use of remote switches, we can alter the robot's course when it reaches the end of the field. The microcontroller is in charge of the entire procedure. Tractors are used on farms to plough the ground and plant seeds, which is something we do on a daily basis. However, it takes more time, and there is always a manpower shortage. The primary goal

of automation in our country is to reduce manpower; the buzzword in all industrial firms generally refers to electrical, electronic, and mechanical components. Automation eliminates a lot of time-consuming manual labour and speeds up production. We currently have a manpower need.

When compared to tractors or any other agricultural instrument, this machine uses less energy. Pollution is also a major issue that may be avoided by employing solar panels. A manual agriculture takes longer and pollutes the environment. As a result, now is the time to automate the ploughing and seeding processes. An increase in high-speed operation is also required. The creation of a robot that can do automated ploughing and sowing operations while also stabilising the environment's humidity. Robotics and automation can help farmers meet their production demands more efficiently. In processes such as sowing and ploughing, man-made automation is possible.

2.LITERATURE SURVEY

2.1. "Agricultural Robot for Automatic Ploughing and Seeding" 2015 IEEE International Conference on Technological Innovations in ICT (TIAR 2015) (Amrita Sneha.A, Abirami.E, Ankita.A, Mrs. R. Praveen, Mrs. R. Srimeena).

This research aims to create a robot that can do tasks such as autonomous ploughing and seed dispensing. It also has manual controls as needed and uses humidity sensors to keep track of the humidity. The AVR At mega microcontroller is the major component here, and it oversees the entire operation. The robot starts by tilling the entire field and then ploughing it, dispensing seeds side by side. The robot is operated in automatic mode on the field, while it is strictly operated in manual mode outside of the field.

2.2. "Automated Farming Using Microcontroller and Sensors" (IJSRMS) ISSN: 23493371 (Abdullah Tanveer, Abhishek Choudhary, Divya Pal, Rajani Gupta, Farooq Husain)

Farming can be done with the use of innovative technologies to increase crop growth. We will measure temperature, light, humidity, and soil moisture in this project. The focus of this article is on automatic control features utilising cutting-edge electronics technologies such as a microcontroller and a GSM phone line. Because the project is automated, it requires less staff.

2.3. "Design and Implementation of Seeding Agricultural Robot" (JIRAS) (P.Usha, V. Maheswari, Dr. V. Nandagopal)

The robot system is employed in this paper to build a procedure for growing agricultural land without the usage of human labour. The goal of the paper is to save manpower, time, and money while increasing production.

3. EXISTING METHODOLOGY

More electricity is required by the current system. The suggested system, on the other hand, employs an autonomous seed sowing mechanism and sensors that are significantly less expensive, lowering the system's cost parameter. Sensor intolerance to external conditions, high cost, and a bulky construction are further shortcomings of the present technology.

4.PROPOSED METHODOLOGY

Ploughing, Seed distribution andwater sprinkler are three key activities that this IOT based agriculture robot does in the farm industry. This robot has a control panel that allows you to pick field length and breadth in feet. A function key allows you to pick a mode such as ploughing, seed distribution, or pesticide sprayer after selecting the field size. The DC geared motors will be activated by a start button, allowing the Agriculture Robot to execute the specified job. As a result, the suggested solution decreases the drawbacks as outlined below.Sensors are susceptible to external variables, therefore an automated system requires fewer sensors and less manpower.

5.REQUIREMENTS

5.1. HARDWARE REQUIREMENTS:

5.1.1. Arduino UNO:

The Arduino Uno is an open-source microcontroller board designed by Arduino.cc and based on the Microchip ATmega328P microprocessor. The board has digital and analogue input/output (I/O) pins that may be used to connect to various expansion boards and other devices. The board features 14 digital I/O pins (six of which are capable of PWM output), 6 analogue I/O pins, and is programmable through a type B USB cable using the Arduino IDE.

5.1.2. Bluetooth module:

The HC-05 module is a Bluetooth SPP (Serial port protocol) module, which means it talks with the Arduino through serial. This module is completely certified Bluetooth V2.0+EDR (Enhanced Data Rate) 3Mbps Modulation with complete 2.4GHz radio transceiver and baseband for wireless serial communication. This module's maximum wireless communication range is 10 metres.

The HC-05 Bluetooth module differs from other modules such as the HC-06 in that the HC-06 can only be configured as a slave, but the HC-05 can be set as both a master and a slave, allowing communication between two microcontrollers such as two Arduino boards.

5.1.3. Relay module:

A relay is a switch that is controlled by electricity. Many relays employ an electromagnet to mechanically activate a switch, however solid-state relays and other working principles are also used. Relays are employed when a separate low-power signal is required to control a circuit or when several circuits must be controlled by a single signal.

A contactor is a type of relay that can manage the high power necessary to drive an electric motor or other loads directly. Solid-state relays use a semiconductor device to execute switching instead of moving elements to manage power circuits.

To move their contacts in one way, magnetic latching relays require one pulse of coil power and another, redirected pulse to move them back. Pulses from the same input that are repeated have no impact. Magnetic latching relays are helpful in situations where power interruptions should prevent the contacts from transitioning.

5.1.4.DCmotors:

A DC motor is a type of rotary electrical motor that converts direct current (DC) energy into mechanical energy.

Magnetic fields created by electrical currents are used in DC motors to power the movement of a rotor mounted within the output shaft. The output torque and speed are determined by the electrical input as well as the motor's design.

A DC motor is made up of a stator, an armature, a rotor, and a brush commutator. The two magnetic fields inside the motor have opposite polarity, which causes it to turn. DC motors are the most basic sort of motor, and they're utilised in domestic products like electric razors and automobile electric windows.

Almost all DC motors contain an internal mechanism, either electromechanical or electronic, that changes the direction of current in a section of the motor on a regular basis.

5.1.5.Motor drivers:

Motor drivers operate as a connection between motors and control circuits. The controller circuit operates on low current signals, but the motor requires a large amount of current. The purpose of motor drivers is to convert a low-current control signal into a higher-current signal capable of driving a motor.

We need to connect the motors with wireless technologies such as Bluetooth, 2.4 GHz Rf modules, and so on in order to operate the robot remotely with a remote controller.

The fundamental criterion for the controller's operation in motor interface with controllers is low voltage and a small quantity of current. However, the operation of the motors necessitates a high voltage and current. In other words, the controller or processor's output is insufficient to run a motor. Direct interfacing of controllers to the motor is not possible in this case. As a result, we employ a Motor Driver Circuit or IC.

Not only in the case of controllers, but also when connecting motors with 555 timer ICs or 74 series ICs, they are unable to give the enormous current that the motor requires. If a direct connection is made, there is a danger that the IC will be damaged.

5.1.6.Soil moisture sensor:

The soil moisture sensor is made up of two probes that measure the volumetric content of water in the soil. The two probes enable current to flow through the soil, and the resistance value is used to calculate the moisture content. When there is more water in the soil, it conducts more electrical, resulting in less resistance. As a result, the moisture content will be increased. Because dry soil conducts electricity poorly, when there is less water, the soil conducts less electricity, resulting in increased resistance. As a result, the moisture content will be decreased.

5.2.SOFTWARE REQUIREMENT

5.2.1.Arduino IDE:

It's simple to create code and upload it to the board using the open-source Arduino Software (IDE).Windows, MAX OS, and Linux are all supported.The Arduino Integrated Development Environment (IDE) includes a text editor for writing code, a message area, a text terminal, a toolbar

with buttons for basic operations, and a menu system. It communicates with and uploads programmes to the Arduino hardware.

6.SYSTEM DESIGN

6.1.Block diagram:

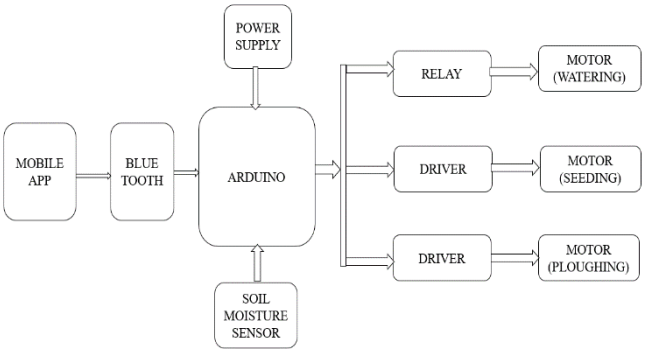

Here the agriculture robot is operated by mobile through Bluetooth module. Here, this robot is controlled by mobile app through Bluetooth module, manual operation is performed by mobile app as follows, whenseed control button is pressed, then seeding is carried out in all the rows of the farming plot. When water control button is pressed, then the planted seeds in all the rows of the farming plot are watered. When water splinkler control button is pressed, then water is sprayed on all the plants. Automatic ploughing, sowing, and water spraying are all performed by the Agricultural Robot.

The robot starts by tilling the entire field and then ploughing it, dispersing seeds side by side.

The soil must be at a specific moisture level before seeds may be planted. The soil moisture sensor is used to monitor the moisture content of the soil, and the data is then sent to the Arduino board. Water is provided to the soil if the water content is below the user-defined minimum. After then, seeds are dropped at a certain pace specified by the user utilising a complicated self-designed seed dispensing system. The robot will control the water spraying mechanism to the soil after sowing the seed. To activate water sprinkling, it receives a signal from Arduino.

7.RESULT

FIG.7.1:Agriculture Robot

This is the final output of the project. Seed planting, water pumping, plouging, and robot forward and backward movement may all be done with the use of a smartphone app.

FIG.7.2.Ploughing operation

Agriculture robot starts ploughing the entire field, when plough button is pressed.

FIG.7.3:Seeding operation

Robot plant seeds side by side when seed control button is pressed.

FIG.7.4. Water sprinkling

Water is sprayed by robot when the moisture level in the soil is less

8.CONCLUSION

The fast growth of industry is leading workers in rural areas to migrate to the urban areas. Agriculture is experiencing a shortage of workers as a result of this. We can assist farmers in the earliest stages of agriculture by deploying this robot in the area of agriculture, such as sowing, ploughing, and water spraying. This robot might be a better replacement for the humans who do the sowing, ploughing, and watering. This robot is extremelybeneficial to farmers who want toengage in agriculture but are unable to do so due to a labour shortage.So the main purpose of our project is to increase the speed of work and to reduce the human effort in agriculture fields.

Conflict of interest statement

Authors declare that they do not have any conflict of interest.

REFERENCES

[1] S, Li, J, Cui, Z, Li, "Wireless Sensor Network for Precise Agriculture Monitoring," Fourth International Conference on Intelligent Computation Technology and Automation, Shenzhen, China, March 28-29, 2011.

[2] K Honda, A.Shrestha, A.Witayangkurn, et. al., "Field servers and Sensor Service Grid as Real-time Monitoring Infrastructure for Ubiquitous Sensor Networks", Sensors, vol. 9, pp. 2363-2370,2009

[3] Ashwin Raut, MrunalPanse, Darshan Chaware, Aniruddha Kaparkar "Sensor Based Automated Irrigation System", International jouranal of engineering reaserch& Technology, ISSN: 2278- 0181, Vol. 4 Issue 05, May-2015.

[4] Muhammad Azman Miskam, Azwan bin Nasirudin, Inzarulfaisham Abd. Rahim; "preliminary".

[5] Kumar.S, S.K.Kamra, R.K.Yadav, and B.Narjary. 2014. Effectiveness of horizontal filter for artificial groundwater recharge structure. Journal of Agricultural Engineering, 51(3): 24–33.

[6] Dorhout, D. 2011. The Robot Farmer. Prospero: Dorhout R&D LLC. Available at: dorhoutrd.com/prospero_robot_farmer. Accessed 20 June 2017

[7] Ge, N., H. Li, L. Gao, Z. Zang, Y. Li, J. Li, X. Lei, and Z. Shen. 2010. A WebBased Project Management System for Agricultural Scientific Research. In Management and Service Science (MASS), 2010 International Conference, 1–3. Wuhan, China, 24-26 August. Available at: ieeexplore.ieee.org/xpls/.

[8] Godoy, E.P., R.A.Tabile, R.R.D.Pereira, G.T.Tangerino, A.J.V.Porto, and R.Y.Inamasu. 2009. Design and implementation of a mobile agricultural robot for remote sensing applications. In CIGR Proceedings Section V Technology and Management to Increase the Efficiency in Sustainable Agricultural Systems. Rosario, Argentina, 1-4 September. Available at: http://journals.sfu.ca/cigrp/index.php/Proc/article/view/110/109

[9] Kenneth, J.A. 1996. The 8051 microcontroller architecture, programming, and applications. India Reprint Penram: Delmar Publishers, Inc.

[10] McIntosh, P. 2015. Agricultural Robotics: Here Come the Agribots, Maximum Yield news letter, 1 st Jan 2015.

[11] Southall.B, T.Hague, J.A.Marchant, B.F.Buxton. 2002. An autonomous crop treatment robot: Part I. A.Kalman filter model for localization and crop/weedclassification. The August, 2017 Agriculture robot (Agribot) for harvesting underground plants (rhizomes)

[12] Muhammad, A. M, J.G.Mazidi, R.D.Mckinlay. 2008. The 8051 Microcontroller and Embedded Systems. 2nd Ed. Delhi, India: Pearson Education Inc. Available at: journals.sfu.ca/cigrp/index.php/Proc/article/view/116/115.

[13] Tamaki.K, Y.Nagasaka, and K.Kobayashi. 2009. A rice transplanting robot contributing to credible food safety system. In Advanced Robotics and its Social Impacts (ARSO), IEEE Workshop on Advanced Robotics and its Social Impacts, Tokyo, Japan, 23-25 November. Available at: ieeexplore.ieee.org.

[14] S.Thenmozhi , M.M.Dhivya, R.Sudharsan, and K.Nirmalakumari. 2014. Greenhouse management using embedded system and zigbee technology. International Journal of Advanced Research in Electrical, Electronics and Instrumentation Engineering, 3(2): 7382–7389