IJMTST is UGC Approved Journal with Journal Id: 43137

International Journal for Modern Trends in Science and Technology, 8(S05):64-69, 2022

ISSN: 2455-3778 online
DOI: https://doi.org/10.46501/IJMTST08S0511
Available online at: https://www.ijmtst.com/vol8si05.html

A Novel Irrigation System using IoT

K. Jyothi | CH. Nageswararao | CH. Amulya | CH. S.R.D. Sudheer | CH. Nikhil Teja

Department of Electronics and Communication Engineering, Godavari Institute of Engineering and Technology(A), JNTUK, Kakinada.

To Cite this Article
K. Jyothi, CH. Nageswararao, CH. Amulya, CH. S.R.D. Sudheer and CH. Nikhil Teja. A Novel Irrigation System using IoT. International Journal for Modern Trends in Science and Technology 2022, 8(S05), pp. 64-69. https://doi.org/10.46501/IJMTST08S0511

Article Info
Received: 26 April 2022; Accepted: 24 May 2022; Published: 30 May 2022.

ABSTRACT

The Smart irrigation system has a necessity for making user-friendly environment for farmers. This paper presents an Automated Irrigation system based on IVRS (Interactive Voice Response System) for remote controlling and monitoring of irrigation loads. The system consists of temperature sensor, PIR sensor, Rain drop sensor and moisture sensor which is connected to the system (NodeMCU). This NodeMCU ESP8266 kit uses the sensors to receive the information about atmospheric temperature and moisture of soil and then delivers the data towards the user in voice format, so that user can take the decision according to the data whether to ON and OFF the water supply. The PIR sensor detects general movement of the things. The NodeMCU is an open-source software and hardware development environment that is built on a chip called ESP8266. The water pumps from motor is connected to more than one fields. The crop in the fields may or may not be same but the motor pumps water equally to all the fields connected to it. Because of this, some crops are not growing properly due to the excess amount of watering or less amount of watering. So, this project is mainly designed to solve these problems by pumping how much water the field requires. The motor is connected to the watering pipes of the fields with water regulators. When we switch ON the motor, the water flows to the fields through water pipes. When the field receives sufficient amount of water, the moisture sensor sends information to NodeMCU, which will send notification to the user. So that the farmer can stop watering to that particular field by giving voice command.

Keywords— ***speech recognition; speech to text; text to speech conversion; NodeMCU ESP8266; temperature sensor; Soil moisture sensor, servo motor; PIR sensor, rain drop sensor.***

1.INTRODUCTION

Water is the necessity of every living creature. So, it is individual responsibility and prime duty to save water. In irrigation, most of the water goes in vain because of free flow irrigation. The water should be efficiently used in irrigation by the use of modern techniques. It is essential to know about the recent developments to overcome the free flow of water in irrigation and its management by using smart irrigation techniques. Smart irrigation has a necessity for making userfriendly environment to farmers [10]. In this work an embedded system is using wireless sensor was introduced to provide communication between the farmers control unit and farm unit [10]. Due to this technique the wastage of

water was reduced, which also avoids problems related to excess watering such as soil salinity, fertility and soil quality. There are various telemetry techniques which are useful formaking communication between the transmitter unit (i.e., farm unit) and the receiver unit (i.e., farmer sitting room) for making irrigation voice controllable, and these are zig bee protocol, GSM (Global System for Mobile Communication), NODEMCUetc..[10] Microcontrollers are widely used in Embedded systems products. An Embedded product uses the microcontroller to do one task only. The processor within a printer is an example of an embedded system because it only performs one task: receiving data and printing it. Although microcontroller is preferred choice for many Embedded systems, there are times that a microcontroller is inadequate for the task [11]. As a consequence, numerous generalpurpose microprocessors manufacture, including as INTEL, Motorola, AMD and Cyrix have aimed their microprocessors for the upper end of Embedded market in recent years. Reduced power consumption and space are two of the most significant requirements of embedded systems. More functionalities can be integrated into the CPU chips to achieve this. In additions to some forms of I/O and ROM on a single chip, all embedded CPUs have minimal power consumption. The tendency in higher performance Embedded systems is to include more and more functions on the CPU chip, allowing the designer to choose which features to use.

2. LITERATURE SURVEY

The automation system composes of temperature sensors, moisture sensors Analog to Digital Converter (ADC) and solenoid valves. The essential parameters like soil moisture and temperature of environment are measured to make the system automatic. For this, the entire field is split into small sections having one moisture sensor and temperature sensor inserted in each section [9].

The free flow of water also causes irrigated land to various problems like soil salinity, the effect on fertility, soil quality is few. Nutritional value of the crop increases by various methods these days. The appropriate crop rotation and growing legumes increase the nitrogen content in the soil which is very useful for the crop growth [15].

In [14] Wahba et al. state that the best irrigation scheduling using drip irrigation to improve water use efficiency and crop productivity, and the study is based on green peas. In this study the green peas were grown in two seasons divided into two situations one is increased irrigation to maintain high moisture value and the other is medium irrigation, and their effects were studied on growth criteria like leaves area, plant height, fruit set per cent as well as dry matter of stems, leaves, and total plant.

Dasara et al. proposed a system in which water is used in a planned way as the ground level of ground water is decreased day by day. For this purpose, it is using GSM system for maintaining communication between the farmer and farm unit, 89C51 microcontroller, Optoisolator, 16X2 Liquid Crystal Display, Relay. The GSM system gives SMS at the display and maintains communication between the farm unit and farmer [6].

Bharathi and Prasunamba is using Programmable Logic Controller (PLC) and SCADA for irrigation in smart cities and the system is also using Internet of Things (IoT) for maintaining communication between the irrigation land farmer. This is also giving a reference model for smart irrigation by using water management and IoT [7] & [4].

3. EXISTING METHOD

In an existing automated water management system, we cannot take decision at that instance by taking different attribute of agriculture soil. At the moment, the automatic watering system can only work on one parameter at a time. Soil has different attribute like soil moisture and temperature, humidity etc. Soil moisture is below threshold value then water valve is open for water supply and after proper water supply if it goes above threshold value water valve is get closed. The current system is unconcerned with the amount of water available in the reservoir and the amount of water required by a specific crop. So, system does not have decision power. It can only be used for one condition at a time. In the system send the information about the growth of paddy plant and sugar cane in the field. The data are sent details about every stage in the plant growth in the field.

With the growing adoption of the Internet of Things (IOT), connected device have penetrated every aspect of our lives, from health and fitness, home automation, automotive and logistics, to smart cities and industrial IOT. As a result, it's only natural that IOT, linked devices, and automation would find their way into agriculture and, as a result, vastly improve many aspects of farming. Farmers have gained improved control over the process of producing livestock and growing crops by using various smart agriculture technologies, making it more predictable and efficient. In this we will explore the IOT use cases in agriculture and examine their benefits. If you are thinking about investing in smart farming or developing an IOT solution for agriculture, now is the time to get started. In agriculture, there are many different types of IoT sensors and IoT applications that can be used:

Monitoring of climate conditions:

Weather stations, which include numerous smart agricultural sensors, are probably the most popular smart agriculture gadgets. They capture data from the environment and transfer it to the cloud from locations all over the field. The information provided can be used to map the climate conditions, select appropriate crops, and take the necessary steps to improve their capacity (i.e., precision farming).

Green house automation:

Weather stations can automatically modify the conditions to match the supplied parameters in addition to gathering environmental data. Greenhouse automation systems use a similar principle. For instance, Farm app and grow link are also IOT agriculture products offering such capabilities among others. Green IQ, a product that uses smart agriculture sensors, is equally intriguing. It's a smart sprinkler controller that lets you control your irrigation and lighting systems from anywhere in the world.

Crop management:

Crop management devices are another sort of IoT product in agriculture and a component of precision farming. They should be installed in the field to gather data specific to crop farming, just as weather stations. Everything from temperature and precipitation to leaf water potential and general crop health can be used to quickly collect data and information for better farming operations, As a result, you'll be able to keep track of your crop's progress and any irregularities, allowing you to efficiently prevent diseases and viruses that could impair your output. Arable and semis are solid examples of how this use case might be implemented in practice.

End-to-end farm management system:

The so-called agricultural production management systems are a more complex type of IoT product in agriculture. They often incorporate a number of on-premises IoT devices and sensors, as well as a robust dashboard with analytical capabilities and built-in accounting/reporting functions. This allows you to monitor your farm from afar and streamline most of your business processes. Similar solutions are represented by Farm Logs and Crapo.

Internet of Things (IOT) is a cutting-edge technology that makes our lives easier and more enjoyable. With the tremendous growth in the number of internet users over the last decade, the internet has become an integral part of daily life, and IoT is the most recent and rising internet technology. IoT technology brings us into a world where we can connect, interact and command any gadget via the internet. It's a massive network that connects people and things.

Precision farming:

Precision farming is also known as precision agriculture. Precision farming can be thought of anything that makes the farming practice more controlled and accurate, when it comes to raising livestock and growing of crops. The utilization of IT and numerous object such as sensors, control systems, robots, autonomous vehicles, automated hardware, variable rate technologies, and so on is a crucial component in this approach to farm management.

Agriculture drones:

Technology has changed overtime and agricultural drones are a very good example of this. Agriculture is now one of the most common industries to use drones. Drones are being utilized in agriculture to improve a variety of farming operations. Crop health evaluation, irrigation, crop monitoring, crop spraying, planting, soil and field analysis are some of the ways drones are utilized in agriculture, both on the ground and in the air.

Livestock monitoring:

Wireless IoT apps can be used by large farm owners to collect data on their cattle's whereabouts, well-being, and health. This information assists them in identifying unwell animals so that they can be isolated from the herd, preventing disease spread. It also lowers labor costs as ranchers can locate their cattle with the help of IOT based sensors. These are few existing applications of agriculture which are used.

4. PROPOSED METHOD

The system is made up of both hardware and software elements. The embedded system is the hardware component, whereas the software component is the PHPbased webpage. The webpage is accessible through the internet and consists of a database into which sensor readings are entered using the hardware.

In the proposed system collecting all the data from various sensor like temperature, humidity, moisture and other environmental factors and will do the analysis on the same. During analysis if gets better result of the combination of the data gathered from the various sensor then those data to all the volunteer for further use.

Various sensors, including as temperature sensors, moisture sensors and PIR sensors are deployed in the field portion. The data collected from these sensors is sent via RS232 to the microcontroller.

The automatic irrigation system based on a lowpower microcontroller was created and implemented in this study. We offer a novel system that will have wireless connectivity between server and nodes to eliminate the shortcomings of existing systems such as high cost, complex maintenance, and wired connection. We introduce a new design of embedded new server making use of microcontroller and internet of things. The automated irrigation system consists of distributed sensor network built using soil moisture sensor, temperature sensor and water level sensor. The water level sensor detects excess water in the field, and the engine pumps the water to the outer region automatically.

A data acquisition microcontroller and a transceiver, which transmits sensor measurements to the microcontroller. When the soil moisture and temperature thresholds are met, this gateway allows irrigation to be turned on automatically. This receiver unit also has a duplex communication link based on a cellular Internet interface, using General Packet Radio Service (GPRS) protocol. The Internet connection allows the data inspection in real time on a website, Where the soil-moisture and temperature levels are displayed through an application interface and stored in a database server. This access also enables direct programming of scheduled agriculture schemes and trigger values in the receiver according the crop growth and season management. Because of its energy autonomy and low cost, the system has potential use for organic crops, which are mainly located in geographically isolated area where the energy grid is far away.

We introduce a new design of embedded web server making use of microcontroller and internet of things. The automated irrigation system consists of distributed sensor network built using soil moisture sensor, temperature sensor and water level sensor. The water level sensor detects excess water in the field, and the engine pumps the water to the outer region automatically.

Farm control unit:

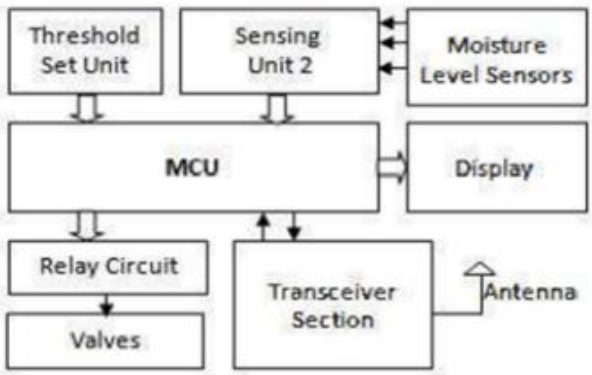

Figure 1: Farm Control Unit

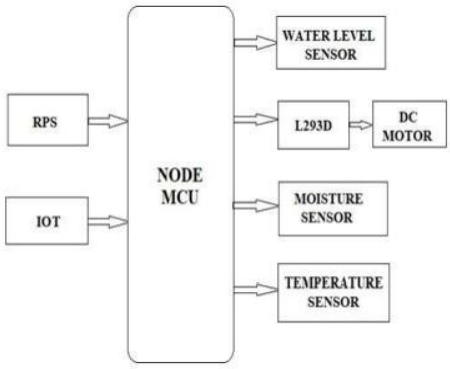

Figure 2: Block Diagram

Power Supply Section:

This portion is responsible for delivering power to all of the preceding sections. It comprises mostly of a transformer that converts 230V ac to 9V ac, followed by

diodes. To correct the ac to dc, diodes are utilized. The resultant rippling dc is filtered using a capacitor filter after rectification. The resultant dc voltage is regulated using a positive voltage regulator.

Microcontroller Section:

This part serves as the project's control unit. This component contains primarily of a Microcontroller and its related circuitry, such as a Crystal with capacitors, reset circuitry, pull up resistors (if necessary), and so on. Because it controls the devices being interfaced and communicates with them according to the program being developed, the microcontroller is at the core of the project.

Temperature Sensor:

Thermistors are a temperature sensing device. It is used to sense the temperature. The exhaust fan will run in this project based on the temperature value.

Water Level Sensor:

A level sensor is a sensor that is used to measure fluid levels. The detecting probe element is made out of an unique wire cable that can detect the surface level of practically any fluid, including water,saltwater,andoils.

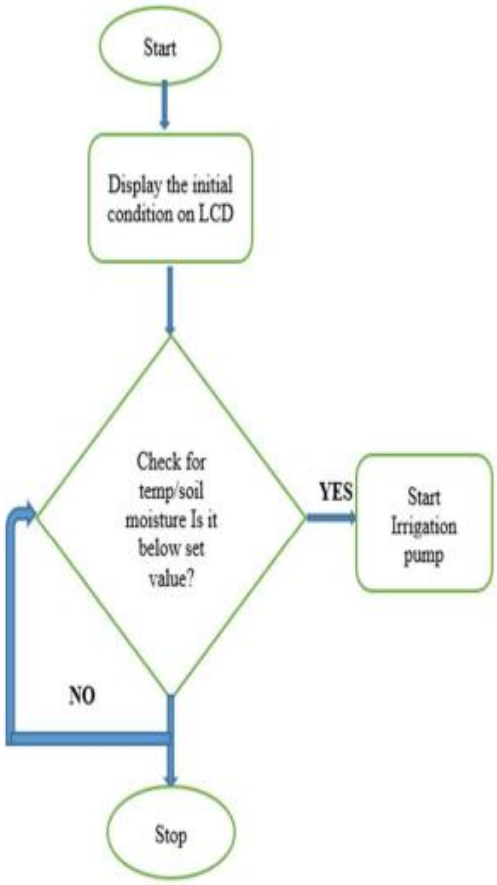

Figure 3: Flow Chart

5. RESULTS

Crop	Water Requirement(mm)
Rice	900-2500
Wheat	450-650
Maize	500-800
Sugar Cane	1500-2500
Ground Nut	500-700
Cotton	700-1300
Tomato	600-800

Table 1: Water requirement to the crop

By this project we can manage water quantity levels to the particular crop by fixing the threshold set unit using the above analysis so that, the wastage of water is reduced and there is no damage to the crop.

RAIN	SOIL MOISTURE	MOTOR CONDITION
Low(No Rain)	Low (Dry)	ON
Low (No rain)	High (Wet)	OFF
High	Low (Dry)	OFF
High	High (Wet)	OFF

Table 2: Conditions of Motor according to the sensor readings

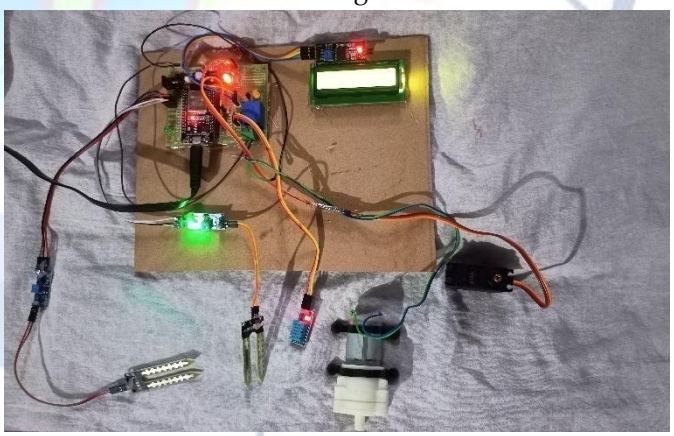

Figure 4: Hardware Implementation of project

We will get the notification ("water the plants") to the mobile when the soil is dry and there is no rain. If soil is wet and there is no rain (or) when there is a rain and soil condition is dry then we will get the notification ("stop watering"). By those notifications the farmer can operate the water motor by his voice commands. Whenever any object or a thing is moved across the PIR sensor then it

will send the notification ("object detected") to the mobile application. Then the farmer can produce the sound at the field by clicking a button in mobile application.

6. CONCLUSION

Thus, this project has a very useful application for all those people who have farms and like to contribute to the agriculture of country but are poised with a lack of personal and lack of time from their daily duties. This also allows surveillance on the personal and their crops so as to not occur losses. It is easy to use for anyone with a smart phone and doesn't require maintenance once setup.

The study offers a useful tool in the hands of users to save many farm inputs such as water, labour etc. by applying the right amount of water of appropriate quality under the given situation and at the right time, the farmer would be able to make the best use of available resources and prevent the free flow of water, by adopting accurately recommended irrigation practices.

Conflict of interest statement

Authors declare that they do not have any conflict of interest.

REFERENCES

[1] A. Anusha and D. Gouthami, "Wireless network-based automatic irrigation System," International Advanced Research Journal in Science, Engineering and Technology, vol. 3, issue 7, pp. 179-182, Jul 2016.

[2] A. Sumalatha and G.E. Kumar, "Energy efficient solar powered automatic irrigation system," International Journal of Engineering and Management Research, pp.650-653.

[3] B. Anitha, A. Sandhiya, P. Vidhya, V. Vanaja, and K. Vinodhini, "GSM based automatic irrigation control system for efficient use of resources and crop planning using mobile," International Journal of Advanced Research Trends in Engineering and Technology, vol. 3, issue 2, pp. 554-558, Mar 2016.

[4] C.G.W.B. Ministry of Water Resources Government of India, "Ground Water Scenario in India," Centre Ground Water Board (CGWB) India, Rep. November 2016.

[5] D. Rane, P.R. Indurkar, and D.M. Khatri, "Review paper based on automatic irrigation system based on RF module," IJAICT, vol. 1, issue 9, pp.736-738, Jan 2015.

[6] G. Bharathi and C.G. Prasunamba, "Automatic irrigation system for smart city using PLC and SCADA," International Journal of Scientific Research in Computer Science, Engineering and Information Technology, vol. 2, issue 4, pp. 308-314.

[7] G. Bharathi and C.G. Prasunamba, "Automatic irrigation system for smart city using PLC and SCADA," International Journal of Scientific Research in Computer Science, Engineering and Information Technology, vol. 2, issue 4, pp. 308-314.

[8] G. Kumar, "Research Paper on Water Irrigation by using Wireless Sensor Network," International journal of Scientific Research Engineering and Technology, in Conf. Department of Electronics and communication, Suresh Gyan Vihar University, Jaipur Rajasthan, Nov 2014, pp. 123-125.

[9] H.A. Mansour, "Performance automatic sprinkler irrigation management for production and quality of different Egyptian wheat varieties," International Journal of Chem. Tech Research, vol. 8, no. 12, pp. 226-237, 2015.

[10] http://shodhganga.inflibnet.ac.in:8080/jspui/bitstream/10603/230245/9/09_chapter%201.pdf

[11] https://www.slideshare.net/Rkmishra00/microcontroller26405760#:~:text=An%20Embedded%20product%20ues%20the%20microprocessor%20%28or%20microcontroller%29,only%20namely%20getting%20the%20data%20and%20printing%20it.

[12] M.K. Al Enazi, A.A. Alomar, K.I. Alinzi, and A.M. Alsaeed ,"Automatic solar digital wireless irrigation systems for open areas and green houses," Advanced Electrical and Electronics Engineering and Scientific Journal, vol. 1, no.1, pp. 20-26, Jan 2017.

[13] P. Banumathi, D. Saravanan, M. Sathiyapriya, and V. Saranya, "An android based automatic irrigation system using bayesian network with SMS and Voice Alert," International Journal of Scientific Research in Computer Science, Engineering and Information Technology, vol. 2, issue2, pp. 572- 578, 2017.

[14] S.A. Wahba, A.M. El-Gindy, K.F. El-Bagouri, and M.A. Marwa, "Response of green peas to irrigation automatic scheduling and Potassium Fertigation," International Journal of Chem. Tech Research vol. 9, no. 3, pp. 228-236, 2016.

[15] S. Pokhrel and S. Pokhrel, "Legumes crop rotation can improve food and nutrition security in Nepal," Agronomy Journal of Nepal, vol. 3, pp. 123- 127, 2013.