International Journal for Modern Trends in Science and Technology, 8(07): 147-152, 2022

ISSN: 2455-3778 online
DOI: https://doi.org/10.46501/IJMTST0807021
Available online at: http://www.ijmtst.com/vol8issue07.html

Study and Simulation of AC/DC Microgrid with Wind and Solar Energy Source

Shraddha Y. Tembhurne, Sneha Tibude

Department of Electrical Engineering, Abha Gaikwad-Patil College of Engineering, Nagpur, India.
Email Id: shraddharjr@gmail.com

To Cite this Article
Shraddha Y. Tembhurne and Sneha Tibude. Study and Simulation of AC/DC Microgrid with Wind and Solar Energy Source. International Journal for Modern Trends in Science and Technology 2022, 8(07), pp. 147-152. https://doi.org/10.46501/IJMTST0807021

Article Info
Received: 04 June 2022; Accepted: 30 June 2022; Published: 05 July 2022.

ABSTRACT

Now-a-days with inadequacy in electrical energy & continuously enlarging fuel cost, leads to investigation on the non-Conventional energy sources. Recently, there are many problems regarding increasing energy demand and decreasing in fossil energies, due to this the utility grid which is integrated with the renewable energy sources to fulfill the demand. The major technical importance of this paper is for study and implementation of DC microgrid. The wind & solar system are connected with the load through Boost Derived Hybrid Converter.Hybrid converter topologies which can supplysimultaneously AC as well as DC from a single DC source. The modeling and simulation of hybrid system is done using MATLAB2018a/SIMULINK. The performance of the hybrid system is evaluated under different speeds & different irradiation levels. Simulation results show that the proposed hybrid system has the potential to meet the demand of an isolated area such as Islands, electrified areas, etc. A 25W prototype is used to validate the operation of the hybrid system and by adding solar plates or wind mill it will increase the capacity of generation and able to supply the maximum demand.

KEYWORDS: Hybrid Converter Irradiance, Hybrid energy system, Non-ConventionalEnergy Resources, DC grid, etc.

1. INTRODUCTION

In this paper, wind and solar plant is design to make a Micro-grid. For the local use in remoteareas Microgrid is a good solution. Microgrid is a small-scale power grid which can operate independently or collaboratively with other small power grids. Microgrid is scaled version of the centralized power system. It can generate, distribute and control power in small community. Microgrids are low or medium voltage grids located at or near the consumption site. Microgrid connects housesand other buildings to central power.

Microgrid mainly uses Non-Conventional Energy Resources as a source of generation. Microgrid refers to distributed energy resources and loads that can be operated in a controlled or coordinated ways, they can be connected to the main power grid or to the completely off-grid. Microgrids are designed to provide uninterrupted power and to balance load demand for a customer which changing power needs.

Microgrid system generally consistsof four parts:

1) Distribution System
2) Distributed Generation source (DG)
3) Energy storage (ES)
4) Controllers and Loads

Over the last two decades, there are lots of new renewable energy technologies have been introduced and being utilized in rural as well as in urban areas. Amongst the several, some of the renewable energy systems and devices are commercially available in the markets. With the increase in demand for the electrical energy due to technological developments and increase in population, decaying of fossil-fuel and environmental concerns such as urban air pollution, global climate changes are boosting up rapidly. In current scenario, for professionals like technicians, engineers and scientists, the photovoltaic technology presents an exciting and bright future. The concept of nano or microgrids is increasingly incorporated and implemented in modernized smart power systems. The foregoing systems have various types of loads that is DC and AC loads which are capable of being interfaced with different conventional or non-conventional energy sources. This interfacing is achieved by using the power electronic converters.

In wind turbine, power of wind is converted into electrical power that can be done by using various generators. In this case, we have to use PMSG (permanent magnet synchronous generator) to convert wind power into electrical power and by using buck converter, generated power is converted into dc power to make microgrid a common DC grid. The main advantage of the surface mounted SG (synchronous generator) is its simplicity and low construction cost in comparison to the inset PMSG. However, the magnets are subject to centrifugal forces that can cause their detachment from the rotor and therefore the surface mounted PMSG are mainly use in low-speed applications. In a direct-driven WECS (wind energy conversion system) the synchronous generator with a high number of poles is use. The surface mounted PMSG can have an external rotor in which the permanent magnets are attached to the inner surface of the rotor. For simulation purpose in MATLAB model of wind turbine with PMSG have to use and after getting output from wind model, it is converted into dc so that power can be controlled easily and also stepped down to match up the PV voltage level by buckconverter.

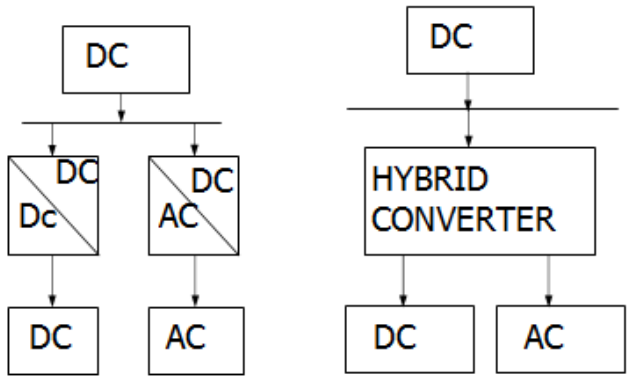

Fig 1-: Schematic Diagram of the system providing both ac and dc from single dc source.

These days, fossil fuel is recognized as a main reason of air pollution, especially in carbon emission. Energy source is changed from fossil fuel to eco-friendly source by means ofrenewable energy. Energy storage is used to improve the instability and unpredictability due to renewable source. Renewable resources are photovoltaic system, solar cell, wind turbine, battery and almost all that sort of things also can be operated in DC power. Therefore, DC distribution system or DC microgrid is being developed. The objectives of this paper are to proposed DC microgrid to controls onsite generation and power demand to meet the objectives of providing power and injecting power into the utility grid if required. The microgrid controller becomes essential for balancing power and load management.

2. OVERVIEW OF DC MIGROGRID

A block diagram is as shown in fig.2. The DC bus connects Wind Energy Conversion System, PV cells, energy storage comprising battery system, grid interface. The wind plant is connected to the DC bus via AC-DC Converter (rectifiers) as wind plant generates alternating current. The solar panels areconnected to the DC bus via a DC-DC converter (Boost Converter). The multilevel energy storage helps to the intermittent and volatile renewable power outputs to manage and deterministic controlled power to main grid is obtained by optimization. This provides uninterrupted power supply to loads when needed is a core duty of microgrids.

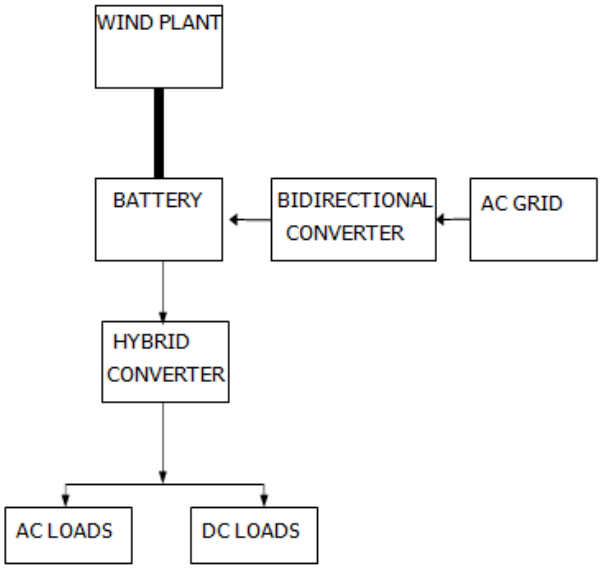

Fig-2: Block Diagram of Microgrid

With the increase in load demand due to technological developments and increase in population, decaying of fossil-fuel and environmental concerns such as air pollution, climate change is increasing rapidly. In current scenario, for professionals the photovoltaic technology presents an exciting and bright future. Nano-micro grids are being interfaced with different grid formed which contains power from different conventional or non- conventional energy sources. This interfacing is done by using different power electronic converters. With this in mind, to drive dc and ac loads simultaneously from a dc input in a single step, a new topology of Boost Derived Hybrid Converter (BDHC)is implemented.

3. BRIEF LITERATURE SURVEY

1) Lie Xu and Dong Chen **(2011)**
2) Baochao Wang, Manuela Sechilariu and Fabrice Loment **(2012)**
3) Nisarkumar R Dave and Manish N Sinha **(2017)**
4) Mishra, R. Adda, and A. Joshi (2011)
5) Prabal Pratap Singh, Subhash Chandra, Ashish Tiwari **(2018)**

SUMMARY OF LITERATURE REVIEW

- It has been noted many times that the world's electricity systems are starting to decentralize in many cases. These tthings are driven by the needs to rein in electricity costs, replace aging infrastructure, also to improve resilience and reliability, reduce CO2 emissions to mitigate climate change, and also provide reliable electricity to area lagging electrical infrastructure. While the balance of this driving factors and detail of the particular solutions may varries from place to place, microgrids have emerged as a flexible architecture for deploying distributed energy resource (DERs) that can meet the wide-ranging needs of different communities from New York to Rural India.
- In industrialized countries, microgrids must be discussed in the context of a microgrid that features GW–scale generating units, also thousands or even hundreds of thousands of miles of HV transmission lines, minimum energy storage, and carbon –based fossil fuels as a primary energy source. Today's grid is not a static entity, though; we are traveling a historic arc that began with small scale distributed generation.
- We had gone through various books, research papers [1][3][6] which gives the thoroughly information about DC Microgrid and Hybrid Converters. Microgrids are a flexible solution for a broad diversity of stakeholders. The primacy of microgrids range from resilience to renewable integration. Microgrids are moving from the laboratory to broad community deployment. Microgrids still faces significant legal and regulatory uncertainties.

4. OPERATION OF BOOST DERIVED HYBRID CONVERTER

Operation of BDHC in Simulation: The operation of BDHC undergoes following interrogation: (i) Boost operation is controlled by DUTY CYCLE

(ii) Inverter operation is done by MODULATION INDEX.

Operating Principle: The schematicdiagram of BDHC is as shown in figure

3. If current through starting inductor

(L) is maintained greater than zero, then the circuit will operate in mode of continuous conduction. In this new BDHC technology, the controlling of AC output has been achieved by employing a modified scheme of Sinusoidal Pulse Width Modulation (SPWM).

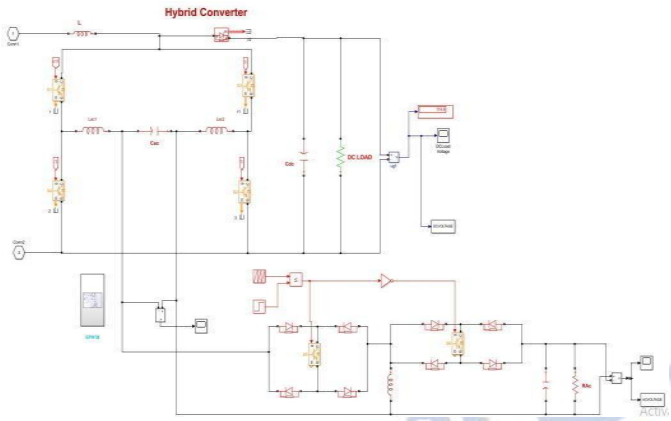

Fig-3: Hybrid Converter Circuit in Matlab BDHC can be operated in three modes:

Shoot-through Interval (STI): This interval is as shown in Figure 4. This interval has been achieved by Gating ON each switch of a particular leg (either S1-S4 or S2-S3). Also the duty cycle of BDHC is decided on the basis of duration of shoot-through interval. The diode Dis reverse bias during this period. The inverter output current circulates within the bridge network switches. Thus, BDHC allows additionalswitching states.

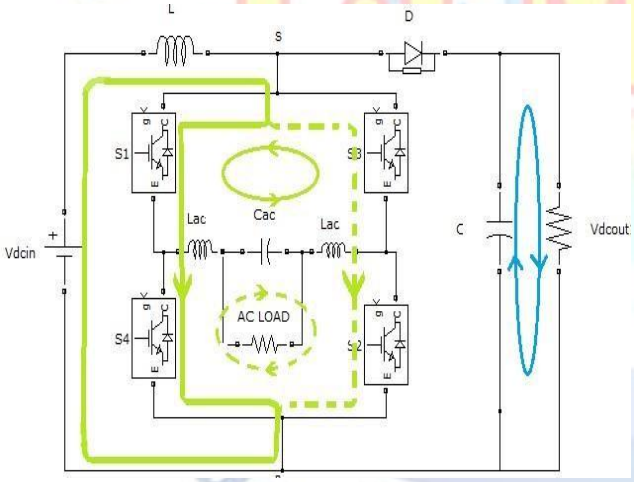

Fig-4: Circuit Diagram of Shoot throughinterval

Power Transfer Interval (PTI): This interval is as shown in Figure 5. while this interval the current is flowing through the opposite leg (S1-S2 or S3- S4) of BDHC via AC load in the converter circuit, the interval of power transfer in attained. During this, the diode D starts conducting and the DC output voltage is obtained.

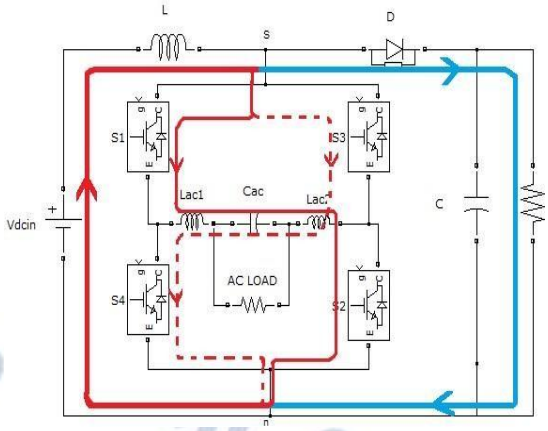

Fig-5: Circuit Diagram of Power Interval

Zero Interval (ZI): This interval is as shown in Figure 6. This interval occurs when the inverter current circulates among the bridge network switches in not sourced. The diode D conducts during this interval. During STI only DC output is obtain only when the capacitor is initially charged. In PTI, both the outputs are obtained. And during ZI only DC as output is obtain.

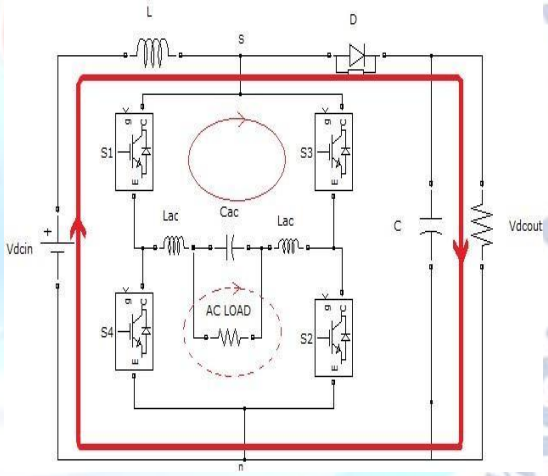

Fig-6: Circuit Diagram of Proposed Converter.

5. WORKING PROCEDURE OF MATLAB SIMULATION:

Microgrids are power distribution networks in which users & generators are in close proximity hence reduces transmission losses as well Cost.

1. Microgrid collects generated power from all the distributed generation resources (Renewable Resources) toform the DC bus system.
2. It connects one part of DC bus to battery for storage & other part of DC bus to hybrid converter.
3. This hybrid converter takes DC as input & gives AC as well as DC as output. it means that hybrid converteris a combination of Chopper & Inverter.

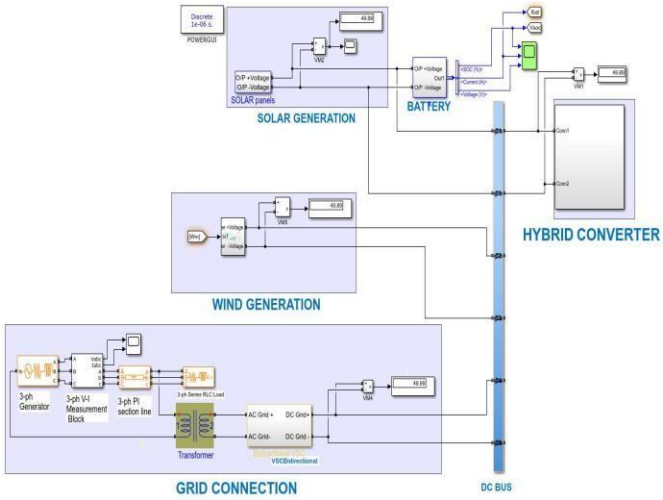

Fig-7: Simulation Circuit in Matlab.

On the other hand, Battery stores power & if it gets charged above 80% then it supplies power to AC commercial grid through bidirectional switch & if it gets discharged to about 40% then it takes power from AC commercial grid through switch. The battery acts after 30sec when it gets charged or discharged to 40% or 80%

6. Results

The solar power plant is modelled and simulated using MatlabR2018a/Simulink. The integration of solar panel & wind plant as a dc input sources has been implemented andverified in MATLAB R2018a/Simulink to drive DC as well as AC loads simultaneously. It gives about 230VAC and about 115V DC as outputs. The analysis of different types of load is done in MatlabR2018a/Simulink. And a prototype is also implemented depending upon the results of simulation.

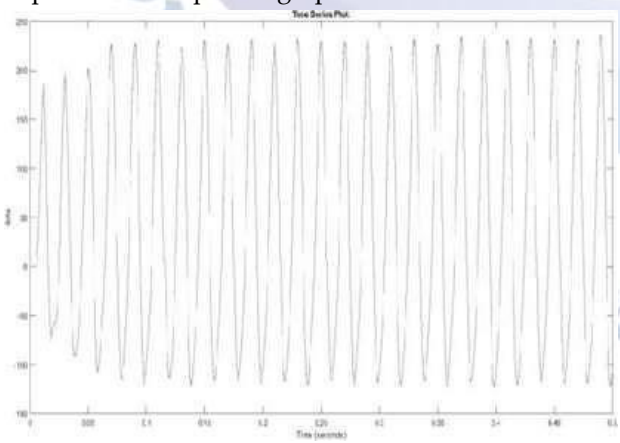

Fig-8: AC output of Hybrid Converter in Matlab

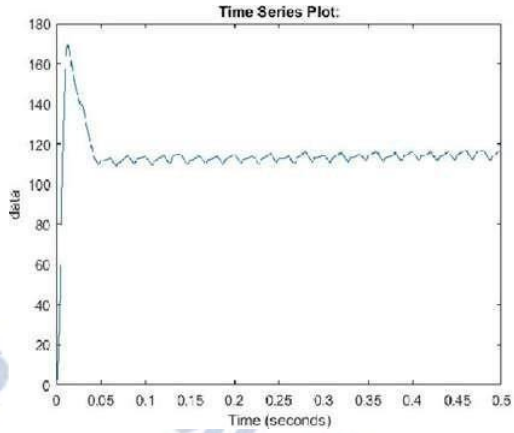

Fig-9: DC output of Hybrid Converter in Matlab

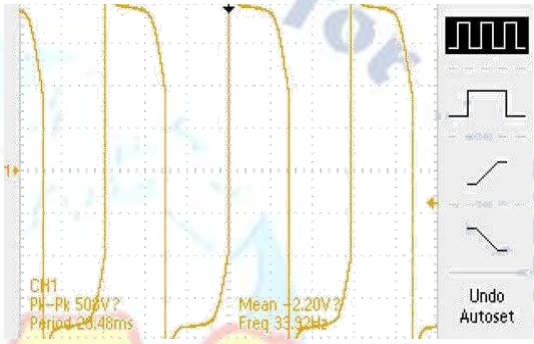

Fig-10: AC output of Hybrid Converter of Hardware

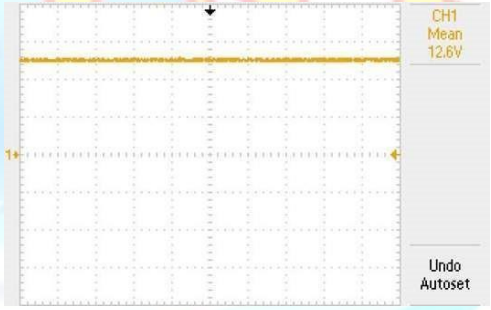

Fig-11: DC output of HybridConverter of Hardware

The integration of solar panel as a dc Input source has been implemented and verified by hardware, and it drivesDC as well as AC loads simultaneously.It gives about 220V AC and about 12.6DC as output.

7. Conclusion

Microgrids are compared with the conventional transmission and the distribution networks. A microgrid has a much flexible structure. Microgrids possess independent control and intentional islanding that take place with the minimal service interruption. The project proposes control and operation strategy for a DC microgrid consisting of wind generation, energy storage device battery, variable load and AC grid

connection. It utilizes and control distributed generation in an effective, flexible and smart manner.

Microgrid is an extension of main grid providing on-site generation capable of fulfilling its local load demand. It is concluded that microgrid is to be added to the main grid to increase the reliability, improve power quality, avoid the use of depleting fossil fuels, reduce greenhouse emissions. The microgrid is connected to islanded or isolated and grid connected modes. Depending upon the requirement these renewable energy sources are connected to the main grid or operate separately. As renewable energy sources are intermitted in nature, energy storage schemes are required to store the energy. It is desirable to develop reliable microgrid operation and effective energy storage algorithms which would enhance the performance of power systems.

Conflict of interest statement

Authors declare that they do not have any conflict of interest.

REFERENCES

[1] Lie Xu and Dong Chen "Control and operation of a DC microgrid with variable generation and Energy Storage," IEEE Trans. on power delivery, vol.26, NO.4 October 2011.

[2] Baochao Wang, Manuela Sechilariu and Fabrice Locment "Intelligent DC microgrid with smart grid communication: Control strategy consideration and design," IEEE Trans. on smart grid, vol.3, NO.4, December 2012.

[3] Olive Ray "Boost-Derived Hybrid Converter with Simultaneous DC and AC Outputs," IEEE Trans. On Industry application, vol.50, NO.2, March/April 2014.

[4] S. Mishra, R. Adda, and A. Joshi, "Inverse Watkins - Johnson topology-based inverter," IEEE Trans. Power Electron., vol.27, no.3, pp., 1066-1070, Mar.2012.

[5] S. Mishra, R. Adda, and A. Joshi, "Switched-boost inverter based on inverse Watkins-Johnson topology," in Proc. IEEE ECCE, Phoenix, AZ, USA, Sep. 2011, pp, 4208-4211.

[6] Prabal Pratap Singh, and Subhash Chandra, and Ashish Tiwari, "Study and Implementation of Boost Derived Hybrid Converter with Simultaneous DC and AC Outputs," IEEE Trans. On developments in Control, Automation & Power Engineering, Noida, India, May 2018.

[7] Nisarkumar R Dave and Manish N Sinha "Simulation of Solar and Wind Power Plant Using MATLAB for Micro-Grid", Kalpa publications of Engineering, vol.1, pp 208- 213, 2017.