As per UGC guidelines an electronic bar code is provided to seure your paper

International Journal for Modern Trends in Science and Technology, 8(05):118-122, 2022

ISSN: 2455-3778 online
DOI: https://doi.org/10.46501/IJMTST0805019
Available online at: http://www.ijmtst.com/vol8issue05.html

IoT Based Patient Health Monitoring System

Y. Sowjanya[1] | Nama Southen Kumar[2] | Diviti Sandeep[2] | Gummadi Harivardhan Reddy[2]

[1]Assistant professor in Department of IT,Anurag University, Hyderabad.
[2]Department of IT Anurag Universty, Hyderabad.
Corresponding Author Email Id: sowjanyait@cvsr.ac.in

To Cite this Article
Y. Sowjanya, Nama Southen Kumar, Diviti Sandeep and Gummadi Harivardhan Reddy. IoT Based Patient Health Monitoring System. International Journal for Modern Trends in Science and Technology 2022, 8(05), pp. 118-122. https://doi.org/10.46501/IJMTST0805019

Article Info
Received: 30 March 2022; Accepted: 02 May 2022; Published: 04 May 2022.

ABSTRACT

There have been attempts to use modern technology in numerous sectors to improve the quality of human life as technology has improved and sensors have been miniaturized. One main area of research that has been seen is the adoption of technology in the healthcare sector. People who require healthcare services find them to be prohibitively expensive, which is especially true in poor countries.As a result, this initiative is an attempt to address a contemporary healthcare issue in society. The main goal of the project was to develop a telemedicine system. The first phase was to use sensors to detect the patient's vital signs, the second was to send the data to cloud storage, and the third was to make the data available for remote viewing. The data may be seen remotely, allowing a doctor or guardian to keep track of a patient's health status while they are not on the hospital premises.

Keywords: Healthcare monitoring system, Internet of things, Sensors, ESP32

1. INTRODUCTION

The absence of competent medical facilities in a growing country like India has long been a source of worry, particularly in distant communities. In rural areas, there is a lack of competent medical care and diagnosis. This is mostly owing to the low doctor-to-patient ratio in these locations. There is a need to improve patient care effectiveness. Improve the effectiveness of the patient monitoring system. The existing patient monitoring system has one major flaw: the necessity that the doctor is physically present in the room. It is not always practical to be near the patient.

Hence It becomes vital to create a system that does not rely on humans. Patient monitoring, require the presence of the doctor. Because of developments in bio-instrumentation and bio-informatics Because of advancements in telecommunications technology, it is now possible to create a monitoring system by using IoT-based devices like Arduino, the ESP32 Wi-Fi module, LCD screen, and others This system can be very helpful for the continuous monitoring of the patient. A doctor can advise the patient from the phone. This system has a low cost of implementation.

A feasibility study is an analysis that considers all of a projects relevant factors including economic, technical, legal, and scheduling considerations to ascertain the likelihood of completing the project successfully.

2. PROBLEM STATEMENT

In the absence of doctors, the patient is unable to consult them, potentially resulting in an
emergency scenario. Each person's particular health is being monitored.

3. PROPOSED METHODOLOGY

The main aim of IoT based patient health monitoring system is to continuously track and monitor patient Oxygen(SPO2), Pulse, Temperature and provide information to doctors, nurses, and other caretakers it has an inbuilt keypad with default functions that patients can use it and can take help in any emergency. Health Monitoring System can be operated and controlled either by a mobile phone or manually from any location. This system makes it easy to check on the status of the patient and also provides data for doctors, patients, nurses, and caretakers.

4. REQUIREMENTS SPECIFICATIONS

i) ARDUINO MEGA

The Arduino Mega 2560 is a microcontroller board based on the ATmega2560. It has 54 digital input/output pins (of which 15 can be used as PWM outputs), 16 analog inputs, 4 UARTs (hardware serial ports), a 16 MHz crystal oscillator, a USB connection, and a power jack, an ICSP header, and a reset button. It contains everything needed to support the microcontroller; simply connect it to a computer with a USB cable or power it with an AC-to-DC adapter or battery to get started. The Mega 2560 board is compatible with most shields designed for the Uno and the former boards Duemilanove or Diecimila.

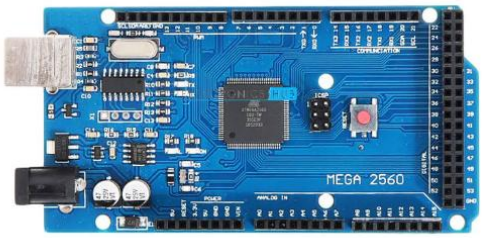

Fig. 2.1.I Arduino Mega 2560

ii) PULSE SENSOR

The Pulse Sensor is a plug-and-play heart-rate sensor for Arduino. It can be used by students, artists, athletes, makers, and game & mobile developers who want to easily incorporate live heart-rate data into their projects. The essence is an integrated optical amplifying circuit and noise-eliminating circuit sensor. Clip the Pulse Sensor to your earlobe or fingertip. Then it into your Arduino, you are now ready to read heart rate.

Fig. 2.1.ii Pulse Sensor

iii) TEMPERATURE AND HUMIDITY SENSOR

DHT22 capacitive humidity sensing digital temperature and humidity module contain the compound has been that calibrated digital signal output of the temperature and humidity sensors. Application of a dedicated digital modules collection technology and the temperature and humidity sensing technology, to ensure that the product has high reliability and excellent long-term stability

Fig. 2.1.iii Temperature and humidity Sensor

iv) SPO2 Sensor

MAX30100 is an integrated pulse oximeter and heart-rate monitor sensor solution. It's an optical sensor that derives its readings from emitting two wavelengths of light from two LEDs – a red and an infrared one – then measuring the absorbance of pulsing blood through a photodetector. This particular LED color combination is optimized for reading the data through the tip of one's finger. It is fully configurable through software registers and the digital output data is stored in a 16- deep FIFO within the device. It has an I2C digital interface to communicate with a host microcontroller.

Fig. 2.1. iv SPO2 Sensor

v) 4*4 KEYPAD

4×3 Matrix Membrane Keypad is high-quality soft-touch feeling button keypad with 100 million life-stroke

lifespans and good resistance to environmental conditions. It is a high-quality product at a very low cost for your application needs. This 12-button keypad provides a useful human interface component for microcontroller projects. Convenient adhesive backing provides a simple way to mount the keypad in a variety of applications. The Keypad 4×3 features a total of 12 buttons in Matrix form. This is a membrane keypad with no moving parts. A female 7-pin berg connector is required for interfacing it with your microcontroller circuits.

Fig. 2.1. v 4*3 Keypad

vi) LCD Display

This is a basic 16-character by 2-line Alphanumeric display. Black text on a Green background. Utilizes the extremely common HD44780 parallel interface chipst . Interface code is freely available. You will need Minimumof 6 general I/O pins to interface to this LCD screen. Includes LED backlight. Works in 4bit and 8 bit Mode.

Fig. 2.1. vi 4*3 Lcd Display

vii) ESP32 Module

ESP32 Development board is based on the ESP WROOM32 WIFI + BLE Module. Its a low-footprint, minimal system development board powered by the latest ESP-WROOM-32 module and can be easily inserted into a solderless breadboard. It contains the entire basic support circuitry for the ESP-WROOM-32, including the USB-UART bridge, reset- and boot-mode buttons, LDO regulator, and a micro-USB connector. Every important GPIO is available to the developer.

Fig. 2.1. vii ESP32 Module

viii) GPS GPRS Module

SIM900A Modem is built with Dual Band GSM-based SIM900A modem from SIMCOM. It works on frequencies 900MHz. SIM900A can search these two bands automatically The frequency bands can also be set by AT Commands. The baud rate is configurable from 1200- 115200 through AT command. SIM900A is an ultra-compact and wireless module. The Modem is coming interface, which allows you to connect PC as well a as microcontroller with RS232 Chip(MAX232). It is suitable for SMS, Voice as well as DATA transfer applications in the M2M interface. The onboard Regulated Power supply allows you to connect a wide range of unregulated power supplies. Using this modem, you can make audio calls, SMS, Read SMS, attend the incoming , etc. etc. through simple AT commands.

Fig. 2.1. viii GPS GRPS Module

ix) BUZZER

An Active Buzzer Alarm Module for Arduino is an audio signaling device, which may be mechanical, electromechanical, or piezoelectric. Just like what you are viewing now, it is a 3.3V- 5V DC Electronic Part Active Buzzer Module. Usintop-qualityty material, it is durable in use. An active buzzer rings out as long as it is electrified. Compared with a passive buzzer, it is a bit expensive but easier to control. Typical uses of buzzers include alarm devices, timers, and confirmation of user input such as a mouse click or keystroke.

Fig. 2.1. ix Buzzer

5. SYSTEM DESIGN

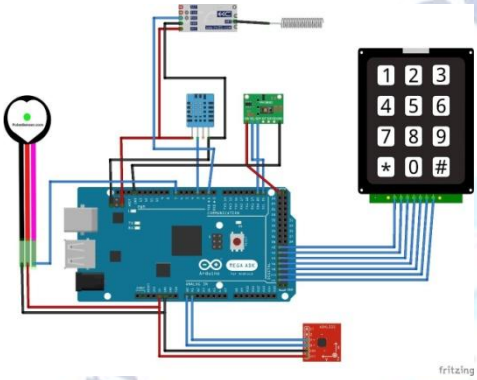

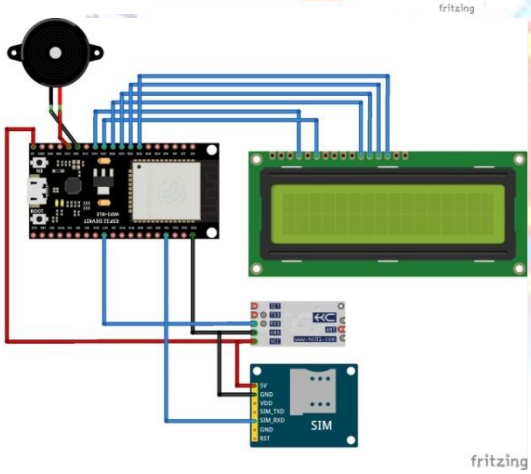

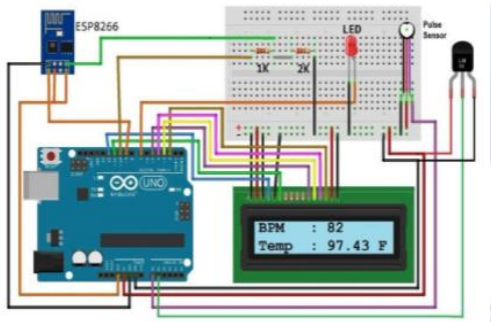

Circuit Diagram

6. SCREESHOTS

6.1 Initial stage of IoT based Health Monitoring System

6.2 Receiver Module which is at nurses, and caretakers

6.3 Sender or Transmitter module which is at patient

6.4 Mobile app readings after sending messages by patient

6.5 Patient fall detected message to doctors, nurses, and caretakers.

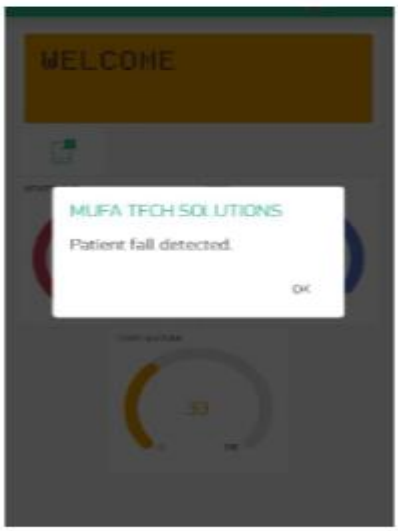

7. CONCLUSION

The main objective of the experiment was successfully achieved. All the individual modules like Heartbeat detection module, fall detection module etc. and remote viewing module gave out the intended results. 55 The designed system modules can further be optimized and produced to a final single circuit. More important fact that came up during project design is that all the circuit components used in the remote health detection system are available easily. With the development in the integrated circuit industry, Micro Electro Mechanical Systems (MEMs) and microcontrollers have become affordable, have increased processing speeds, miniaturized and power efficient. This has led to increased development of embedded systems that the healthcare specialists are adopting. These embedded systems have also been adopted in Smartphone technology. And with increased internet penetration in most developing countries through mobile phones, and with use of the Internet of things (IoT) will become adopted at a faster rate. The Remote Health Care system utilizes these concepts to come up with a system for a better quality of life for people in society.

Conflict of interest statement

Authors declare that they do not have any conflict of interest.

REFERENCES

[1] "Arduino Architecture" https://www.engineersgarage.com/what-is-gsm-gprs-module [Oct. 1, 2017]

[2] "Systems design" https://en.wikipedia.org/wiki/Systems_design [Oct. 15, 2017]

[3] "UML - Standard Diagrams" https://www.tutorialspoint.com/uml/uml_standard_diagrams.htm [Oct. 18, 2017]

[4] "The Internet of Things in healthcare: an overview" https://scholar.google.com/citations?user=Y4opLB8AAAAJ&hl=en [Sept. 7, 2017]

[5] "Envisioning inclusive futures: technology-based assistive sensory and action substitution" https://www.infona.pl/resource/bwmeta1.element.elsevier-3d45bfdd-fe55-359f-84e4-674a21cae024 [Sept 4, 2017]

[6] "A multiple communication standards compatible IoT system for medical usage"http://ieeexplore.ieee.org/document/6577775/?reload=true [Sept 5, 2017]

[7] "Ubiquitous data accessing method in IoT-based information system for emergency medical services" https://www.deepdyve.com/lp/institute-of-electrical-and-electronics-engineers/ubiquitousdata-accessing-method-in-iot-based-information-system-for-YCZzyY5W9g [Sept 6, 2017]

[8] "Implementation of a medical support system considering P2P and IoT technologies" https://www.computer.org/csdl/proceedings/cisis/2014/4325/00/4325a101-abs.html [Sept 7, 2017]

[9] "Acquisition and management of biomedical data using Internet of Things concepts" http://ieeexplore.ieee.org/document/7050625/ [Sept 10, 2017]

[10] "Real-time internet application with distributed flow environment for medical IoT" https://csdl.computer.org/csdl/proceedings/icgciot/2015/7910/00/07380578-abs.html [Sept 11,2017]

[11] Secure end-to-end communication for constrained devices in IoT-enabled ambient assisted living systems" https://www.computer.org/csdl/proceedings/wf-iot/2015/0366/00/07389141-abs.html [Sept 11, 2017]

[12] "Software Testing"https://en.wikipedia.org/wiki/Software_testing [Oct 20, 2017]