As per UGC guidelines an electronic bar code is provided to seure your paper

International Journal for Modern Trends in Science and Technology, 7(12): 241-247, 2021

ISSN: 2455-3778 online
DOI: https://doi.org/10.46501/IJMTST0712046
Available online at: http://www.ijmtst.com/vol7issue12.html

Grid Interactive Solar PV Based Water Pumping Using NPC-MLI fed BLDC Motor Drive

Vasamsetti Sravani, K Sravan Sai Kumar

Department of Electrical and Electronics Engineering, NRI Institute of Technology, Agiripalli, Vijayawada, Andhra Pradesh, India.

To Cite this Article

Vasamsetti Sravani, K Sravan Sai Kumar. Grid Interactive Solar PV Based Water Pumping Using NPC-MLI fed BLDC Motor Drive. *International Journal for Modern Trends in Science and Technology* 2021, *7* pp. 241-247. https://doi.org/10.46501/IJMTST0712046

Article Info

Received: 12 November 2021; Accepted: 05 December 2021; Published: 16 December 2021

ABSTRACT

This paper proposes a bidirectional power flow management of a grid interactive solar photovoltaic (PV) fed water pumping system, using a Neutral Point clamped multi-level inverter. In high-power systems, BLDC motors can be used in various ways. It is easy to build and plan, cheap, and needs less maintenance, and has good efficiency, output, and torque. This paper compares a brushless DC motor (BLDC) fed by a multi-level inverter to a BLDC motor fed by a voltage source inverter (VSI). In the past, multi-level inverters were used for high-power and low-voltage applications. Different inverter forms are used to achieve higher voltage levels. Because of their benefits over other varieties of inverters, clamped multi-level inverters are the most widely used. Compared to a neutral point clamped (NPC) multilevel inverter(MLI)-driven BLDC motor in this analysis, the output of a voltage source inverter-fed BLDC motor.

Keywords: Total harmonic distortion (THD); Torque ripple; Brushless DC motor; voltage source inverter (VSI); Multi-level inverter; Diode clamped multilevel inverter; Total harmonic distortion (THD); Total harmonic distortion (THD).

1. INTRODUCTION

The constantly the emissions of carbon as well as the decrease of fossil fuels allow users to use green energy immediately. The strongest solution to traditional sources for different devices is indeed a solar photovoltaic generation [1]. As just a key use of photovoltaic power [2-3], water pumping has been widely used over last few decades. Originally, the DC engines were used in order to pump that water using an AC motor [4]. Countless study has been conducted into electric motor drive methods to enhance cost-effectiveness and reliability of photovoltaic pumping systems. Due to high power density, no maintenance, long service life, low electromagnetic interference (EMI) and small scale, a permanent magnet brushless DC (BLDC) engine has been determined since last decade [5]. Throughout addition to better efficiency and service free operation, these were decided that the introduction of this engine decreases the costs and sizes of PV panels [6].

The current BLDC powered water pumps supplied by a photovoltaic device only depend upon solar PV energy whether they are a grid-insulated, or standalone system. That solar PV generation is showing its big inconveniences due to it's own intermittency, resulting in an ineffective water pumping device. In a poor climate, the water injection is badly disrupted and the machine is not used since the pump isn't really fully

powered. In addition, a lack of sunshine (at night) contributes to both the water pumping mechanism being shutdown. Throughout order to achieve a stable PV pumping scheme, these limitations must be overcome.

The introduction of PV water battery-based storage not just to raises total costs and operation but also decreases the durability of the battery [11-12]. The most commonly used plastic acid battery usually takes 2-3 years to operate [13].

The above demerits of battery storage have focused on an alternative technical approach that may be better adapted to a stable water pumping process centered on PV generation throughout all respects. In practice, these newly recognized technology interface a PV generator that is mounted in a power grid that pump water. That key issue is to accomplish a constant pumping of water including its maximum potential, regardless of day or night weather.

It is also necessary to create a multifunctional device that will enable a two-way stream, based on the operating conditions, to completely use both a photovoltaic and pumping system. The whole thesis involves applications utilizing a BLDC motor drive for the first time. When described above, the proposed device is configured to create a two-directional power flow controller that enables the PV array power to suit to both the single phase utilities network in case of such a shortage of water pumping and, throughout the event that the PV array power would not be enough to operate a pump through its maximum power from the grid to both the BLDC motorpump. This method provides customers with a means of income by selling power to the company.

That grid interactive PV-based water pumping device is planned, modelled, and simulated just use a BLDC engine drive throughout the MATLAB/Simulink framework. That work is rendered primarily by: The following:

- In order to develop a reliable pump of water, the BLDC motor-conducted solar water pumping device is interfaced with the grid.
- A bidirectional flow regulation, which continually results in maximum volume of water supply irrespective of environmental conditions, is suggested.
- The proposed device is tested such that, if water pumping also isn't needed, the power produced by the panel can be transmitted through to the utility grid. This functionality enables the built tools to be completely exploited. In addition, by selling energy to power supply, the machine becomes a source of revenue.
- The device is planned and operated to provide water in case of a grid breakdown. That water pump system also was supplied. The amount of water supply then consists of solar radiation available.
- Simple frequency switching to both the 3-phase VSI feeding motor of the BLDC. That switching failure associated with both the said VSI was significantly reduced.

CONFIGURATION OF PROPOSED SYSTEM

Fig. 1, whereby a motor BLDC runs that water pump, displays a design of the proposed water pumping method. A PV collection supplies a BLDC engine pump with an NPC-MLI and a boost converter. That boost converter is used to MPPT that PV collection by means of even an InC algorithm whereas the MLI switches the BLDC motor [5, 26] electronically. An integrated encoder produces three signals from Hall-Effect to perform an electronic switch. A single step utility grid supports the DC bus of MLI. The voltage source converter (VSC) allows a bi-directional transmission of power through with a DC bus condenser. That PV Array also supplies the grid if a pump isn't really available for the pumping of water. There is an interface inductor insofar as power flow between both the grid as well as the VSC is permitted and the harmonic current becomes limited through the supply. That Harmonics mostly on supply voltage are regulated through an RC ripple filter.

According because of its advantages, such as high performance, high durability and fewer maintenance, multi- step permanent magnet brushless dc engines are wider distributed in HD systems[1].

In [2], T.M.Jahns and W.L.Soong are attributed to a difference of the source from optimal motor or converter conditions. Tae-Sung Kim [3] utilizes coefficients of the Fourier sequence to construct a new current control algorithm. According to the current

switching step of the BLDC motor, that algorithm will minimize torque ripple material.

Sung Jun Park, Han Woong Park, Man Hyung Lee, F.Harashima are suggested as a means of maximizing the existing reference stage [4] of waveforms, including the situation of unbalanced three-stage situations. That Equation that electromagnetic torque was applied by Hanselman [5], Carlson et al.[6], Pillay and Krishnan[7], and Ying and Ertugrul[8]. It indicated that rectangular excitation currents were required throughout the EMF back trapezoidal to provide constant electric torque. The transducer would have a simpler degree of voltage. The multilevel converter may be used to do this.

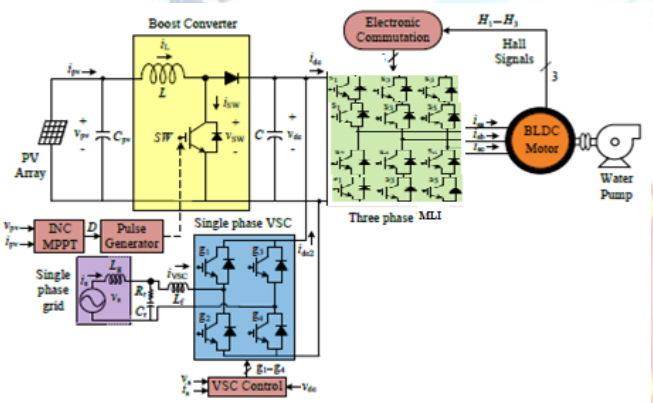

Fig.1 Schematic of the grid interactive PV array based water pumping system using a NPC-MLI fed BLDC Motor drive

M. T. A. Khan [1] mentioned three-level inverters also adopted the word multilevel. That multi-level inverter principle uses a power chain semiconductor switching system with a low-level dc voltage source to create a staircase voltage waveform. Solar cells may be used as outlets for the battery's, thermocouples, capacities, energy resources. To achieve high voltage as output, switching equipment's add these dc sources which have been attached at the very same phase; however, the rate of semi-conductor switching equipment was entirely influenced either by assessment of both that source voltages with it was connected. These increases of voltages that lead to a steep or smooth level of voltage.

The much more advantageous are indeed the standard two-tier inverter. This will function at both basic and higher frequencies. The issues of electromagnetic compatibility are lower so dv/dt tension may be reduced. Multi-level inverter generated common mode voltage (CM) is much less, or otherwise stress is reduced to something like a significant degree. This same produced output voltages were stairs with a low tensile distortion from two phase inverters [9]-[11]. The condenser clamps, cascader H-bridge and multi-level inverter clamped at neutral points[12] were important multi-level inverters. Smaller multi-level inverters may achieve total blending and polished performance. There are BLDC motors supplied through inverter from the voltage source as well as with BLDC engines driven by the BLDC engine with neutral points however the results of MATLAB being simulated and seen.

SIMULATION MODELING

Brushless DC Motor Driven by Voltage SourceInverter

The BLDC magnet governs the direction of the rotor. That sensors throughout the hall power or monitor the Logic Circuit at any time of 600 commands. The pulses emitted from either the logical circuit have been used to move the stator windings to just the voltage sources inverter or to the current inverter depending on where the rotor is situated.

For switching, conventional Brushless DC engines use inverters with voltage source. That following figures demonstrate the output of both the BLDC engine whenever the voltage source inverter is powered. That shape of both the new stator engine may be sinusoidal or trapezoidal depending mostly on back form of even an EMF for optimal conditions. However, there is a divergence from the perfect case at any 600 switching moment because of its inductance in step. Figure 1 to Figure 5 display Simulink model was both the BLDC engine fed through VSI and BLDC permanent magnet motor output provided by the power inverter.

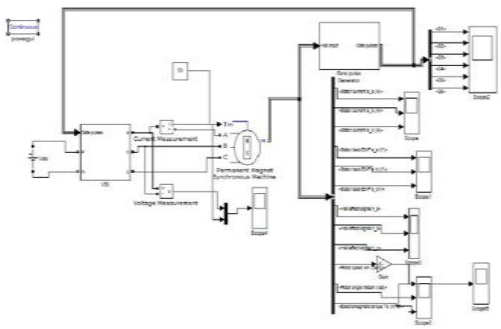

Fig.2.Simulink model of voltage source inverter fed BLDC motor

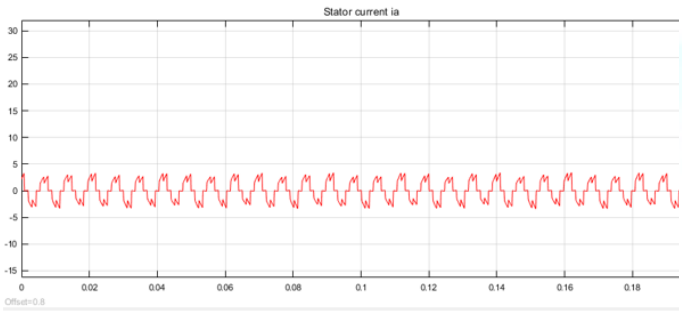

Fig.3. Three phase stator currents of VSI fed BLDC

That EMF as well as the stator phase currents have to be phased if some discrepancy between these EMF but stator phase currents is still causing ripening of the torque.

The voltage source inverter torque fed Brush less DC motor is seen in Fig.5.

It is clear that this really takes 4.4msec to transit, and ripples take place every 600 seconds. That speed of even a BLDC motor is seen in Fig.6.

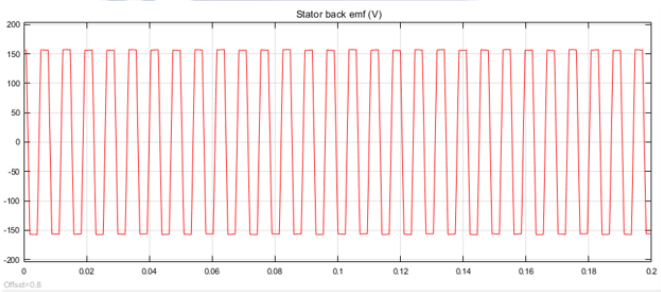

Fig.4.Back-EMF waveforms of VSI fed BLDC

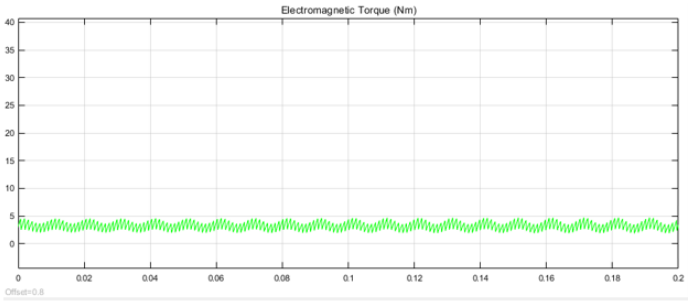

Fig.5.Electroagnetic torque of VSI fed BLDC

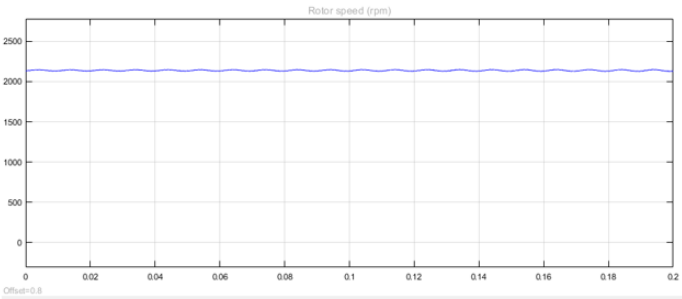

Fig.6.Output speed of a BLDC fed by VSI fed BLDC

3-LevelNeutral Point Clamped Multi-Level Inverter Fed Brushless DC Motor

Because as voltage level rises, the synthesized output waveform is flatter and preferred, reducing harmonic waveform information. In that reason, multi-level inverters have been recycled in the motor industry, as two-level inverters have restrictions such as tension pressures, harmonics and low power ratings.

That three-level NPC topology consists of twelve switches, plus 6 diodes, on neutrally clamped multi-level inverters. Two condensers, both loaded with Vdc[1], must be linked. Per led process comprises four series switches with two series diodes. That diodes are mostly used to close the top switches to something like a zero-dc-link point at a greater potential. That 3-level NPC inverter is provided with a specific switching sequence. That circuit diagram shown in figure 2 above provides an understanding of how and why the power circuit necessary for both the NPC inverter is arranged at three stages. This same diodewas arranged throughout this circuit after which various stages through voltage were given according the neutral point N. That voltage separation is taken into consideration in conjunction with condensers C1 and C2, which are arranged with inserts with neutral N between them. $V_{dc}/2$, $-V_{dc}/2$ seems to be the division including its voltage. This is also known as a

topology with three levels [1]. The Sa and Sa are switches switched ON giving Vdc/2 for −Vdc/2 for the Sa and Sa switches, and also to the Sa1 and Sa2 switches, it is important to toggle it to ON for −Vdc/2. The three-level electricity circuit would then be given. The distinction between the traditional inverter as well as the topology with three levels seems to be the diodes being used divide the voltages. Because as diode D1 and D1' are being used, the dc bus voltage levels hit half.

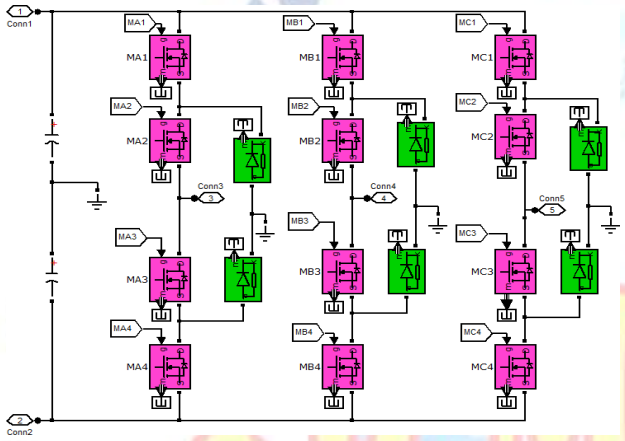

Fig.7. Clamping diode three-level inverter

Switch that voltage over a and 0 on while switchingSa1and Sa1' is Vdc. In this scenario, D1' balances between Sa1' and Sa2' the tension sharing. Sa1' tends to suppress the C1and Sa2 voltage by helping to block the C2 voltage[1]. The voltage over Vanis AC during Vaois DC becomes observed. Once considering a and 0, the circuit would then operate as a dc-dc converter whenever the output becomes removed. Figure 7.represented three-level spacer with dc connection to two condensers for the input of three stages.

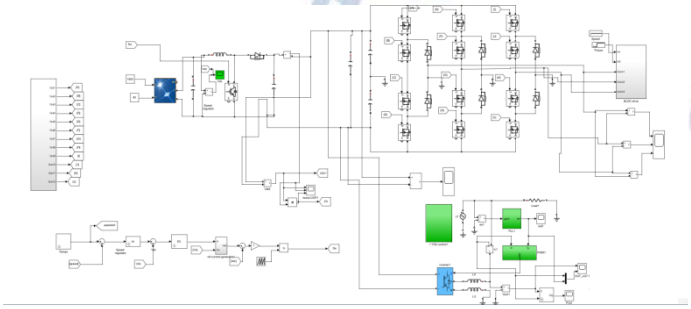

Fig.8. Simulink model of NPC 3-level inverter fed BLDC motor

Fig.8.exhibits the NPC multi-stage inverter simulation model with such a brushless DC level shifting SPWM engine. And Fig.9toFig.11 shows the output waveformsfrom3-phasestatorcurrents, EMF back, electromagnetic torque, rotor rpm. The engine is almost identical to or bigger, with the structure of the waveforms slightly changing. The form of both the back-EMF waves was modified because of sustained switching on multi-level inverters. There's a drop or rip throughout the wave at 900 moment. Due to the abrupt shift of a input voltage at 900 from +Vdc/2 to +Vdc. And at 2700 instant this abrupt dip could also occur. But small in size, it could be insignificant.

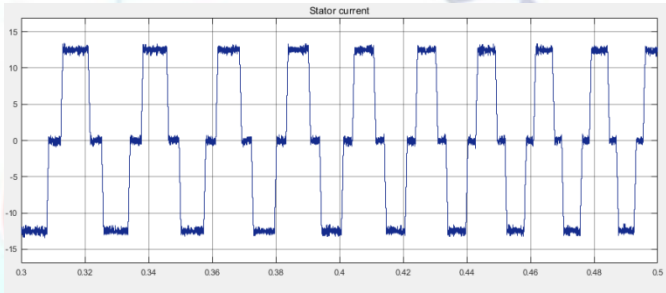

Fig.9.stator current of NPC-MLI fed BLDC

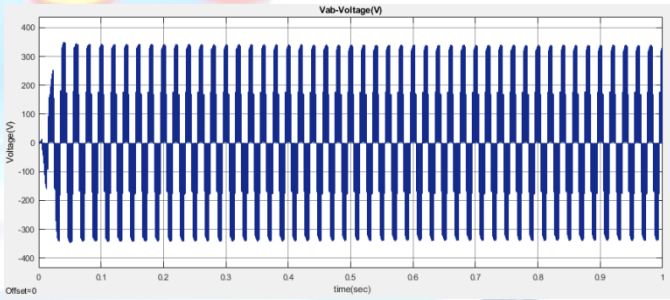

Fig.10. Back-EMF wave forms of NPC-MLI fed BLDC

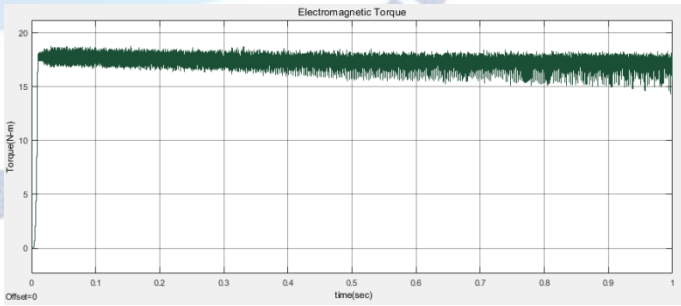

Fig.11. Electromagnetic torque wave of a NPC-MLI fed BLDC motor

From fig.11.It can be observed that though the ripples are occurring in a frequent manner the time it lasts are very less.

ANALYSIS OF TORQUE RIPPLES

The percentage rip may be deliberated while using the following relationship.

%torque ripple = tNAs− tNIn*100

tavg

In Fig.5, average torque is 8.525N-m, maximal torque becomes 10.2N-m, as well as the torque minimum becomes 6.85 N-m, meaning the torque of the latter ratio is a 39.29%. While the average torque throughout Fig.11 is 10,85N m, determined torque becomes 11,85N m as well as the torque is 9,85N m, and therefore amount is 18,43 percent according to the above number.

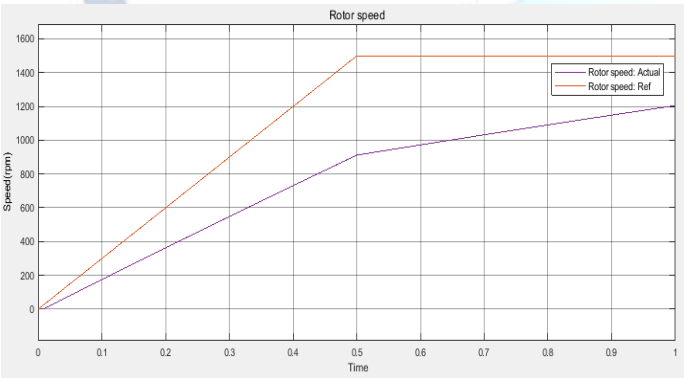

Fig.12. Rotor speed of a BLDC motor fed by NPC-MLI

Table 1.COMPARISION OF PERFORMANCE ANALYSIS

	Two -levelinverter (VSI)	*Multi -level inverter (NPC)*
%Torque ripple	39.29%	18.43%
Transient response time	4.4msec	1.25msec
Power factor	0.939	0.8373
THD for stator currents	37.67%	8.30%
THD for Back-EMF's	29.67%	23.76%
Efficiency	89.25%	90.16%

Parameters of Solar Array

Open circuit voltage = 254.8 V; MPP voltage = 200 V; Short circuit current = 8.15 A; MPP current = 7.5 A; Peak power = 1.5 kW; Open circuit voltage = 254.8 V; MPP voltage = 200 V; MPP voltage = 200 V; Short circuit current = 8.15 A; MPP current = 7.5 A

Motor Poles: 4; Speed: 3000 rpm; Stator resistance: 3.58; Stator inductance: 9.13mH; Voltage constant: 6V/krpm

Components for Interfacing with Grids

DC bus capacitor = 4700F; interfacing inductor = 3.3 mH; R-C filter = 5, 5F; DC bus inductor = 3.3 mH

CONCLUSIONS

For the same motor parameters, the output of a BLDC motor powered by a voltage source inverter is compared to the performance of a BLDC motor driven by a three-level neutral point clamped multilevel inverter. THD decreases with increasing voltage levels.That torque output ripples decreased and the efficiency of the BLDC engine significantly improved whenever this multi-level voltage was added to both the BLDC motor. Through high frequency switching of semiconductor chips, the potential study may be expanded.

REFERENCES

1. M. T. A. Khan, G. Norris, R. Chattopadhyay, I. Husain and S. Bhattacharya, "Autoinspection and Permitting With a PV Utility Interface (PUI) for Residential Plug-and-Play Solar Photovoltaic Unit," *IEEE Trans. Ind. Appl.*, vol. 53, no. 2, pp. 1337-1346, March-April 2017.
2. Muni, T. V., & Lalitha, S. V. N. L. (2020). Implementation of control strategies for optimum utilization of solar photovoltaic systems with energy storage systems. *International Journal of Renewable Energy Research*, *10*(2), 716–726.
3. M. Montorfano, D. Sbarbaro and L. Morán, "Economic and Technical Evaluation of Solar-Assisted Water Pump Stations for Mining Applications: A Case of Study," *IEEE Trans. Ind. Appl.*, vol. 52, no. 5, pp. 4454-4459, Sept.-Oct. 2016.
4. Vijay Muni, T., Srikanth, K. S., Venkatesh, N., &Sumedha, K. L. (2018). A high performance hybrid MPPT control scheme for a grid connected PV system based three level NPCMLI. *International Journal of Engineering and Technology(UAE)*, *7*(2), 37–40. https://doi.org/10.14419/ijet.v7i2.20.11741
5. BillelTalbi, Fateh Krim, ToufikRekioua, Saad Mekhilef, Abdelbaset Laib and AbdesslamBelaout, "A high-performance control scheme for photovoltaic pumping system under sudden irradiance and load changes," *Solar Energy*, vol. 159, pp. 353-368, 2018.
6. PackiamPeriasamy, N.K. Jain and I.P. Singh, "A review on development of photovoltaic water pumping system," *Renewable and Sustainable Energy Reviews*, vol. 43, pp. 918-925, March 2015.
7. Ravi Kishore, D., Vijay Muni, T., & Srikanth, K. S. (2020). A novel power electronic-based maximum power point tracking technique for solar pv applications. In *Lecture Notes in Electrical Engineering* (Vol. 687, pp. 115–126). Springer Science and Business Media Deutschland GmbH. https://doi.org/10.1007/978-981-15-7245-6_10

8. Ravi Kishore, D., Chandra Sekhar, G., Prakash, R. B. R., & Vijay Muni, T. (2020). A novel power management scheme for distributed generators in a DC microgrid IOP: Conference series. In *IOP Conference Series: Materials Science and Engineering* (Vol. 993). IOP Publishing Ltd. https://doi.org/10.1088/1757-899X/993/1/012083
9. K. Rahrah, D. Rekioua, T. Rekioua and S. Bacha, "Photovoltaic pumping system in Bejaia climate with battery storage," *International Journal of Hydrogen Energy*, vol. 40, no. 39, pp. 13665-13675, 19 October 2015.
10. Sowmya, S., Sai Sri Vasthava, V. K., & Vijay Muni, T. (2019). Active filter control strategies for renewable power generation systems using ANN controller. *International Journal of Innovative Technology and Exploring Engineering*, *8*(5), 690–696.
11. Sara GhaemSigarchian, Anders Malmquist and TorstenFransson, "Modeling and Control Strategy of a Hybrid PV/Wind/Engine/Battery System to Provide Electricity and Drinkable Water for Remote Applications," *Energy Procedia*, vol. 57, pp. 1401-1410, 2014.
12. Shabnam, P., Priyanka, A. K., Vijay Muni, T., & Rajasekhar, S. (2020). PID controller based grid connected wind turbine energy system for power quality improvement. *Journal of Critical Reviews*, *7*(7), 31–35. https://doi.org/10.31838/jcr.07.07.06
13. Moulali, S., Vijay Muni, T., Bala Subrahmanyam, Y., &Kesav, S. (2018). A flying capacitor multilevel topology for pv system with apod and pod pulse width modulation. *Journal of Advanced Research in Dynamical and Control Systems*, *10*(2), 96–101.
14. Harshith, I., Raj, B. P., Raja Sekhar, G. G., & Muni, T. V. (2019). A novel methodology for single phase transformerless inverter with leakage current elimination for pv systems application. *International Journal of Innovative Technology and Exploring Engineering*, *8*(6), 1017–1021.
15. Mounika Muppavarapu, G G Rajasekhar, T Vijay Muni, R B R Prakash. ENHANCEMENT OF POWER QUALITY IN A GRID CONNECTED UDE BASED PV INVERTER. JCR. 2020; 7(2): 340-343. doi:10.31838/jcr.07.02.65
16. R Sai Chandan, T L Sai Kiran, G Swapna, T Vijay Muni. "Intelligent Control Strategy for Energy Management System with FC/Battery/SC", JCR. 2020; 7(2): 344-348. doi:10.31838/jcr.07.02.66
17. K. S. S. Kumar and A. R. Devi, "Harmonic analysis of Hybrid Capacitor Commutated Converter in HVDC system," *2012 IEEE Fifth Power India Conference*, 2012, pp. 1-6, doi: 10.1109/PowerI.2012.6479545.