As per UGC guidelines an electronic bar code is provided to seure your paper

International Journal for Modern Trends in Science and Technology, 7(09): 264-272, 2021
Copyright © 2021 International Journal for Modern Trends in Science and Technology
ISSN: 2455-3778 online
DOI: https://doi.org/10.46501/IJMTST0709043
Available online at: http://www.ijmtst.com/vol7issue09.html

Modeling, Simulation and Performance Analysis of Solar PV System

Abhishek G Solanlki[1] | Dr. Sharana Reddy[2] | Kamal Kishore Y[3]

[1] M. Tech student, Electrical and Electronics Engineering, Ballari Institute of Technology and Management, Ballari, Karnataka, India

[2]Professor, Electrical and Electronics Engineering, Ballari Institute of Technology and Management, Ballari, Karnataka, India

[3]Assistant Professor, Electrical and Electronics Engineering, Ballari Institute of Technology and Management, Ballari, Karnataka, India

To Cite this Article

Abhishek G Solanlki, Dr. Sharana Reddy and Kamal Kishore Y. Modeling, Simulation and Performance Analysis of Solar PV System. *International Journal for Modern Trends in Science and Technology* 2021, *7* pp. 264-272. https://doi.org/10.46501/IJMTST0709043

Article Info

Received: 28 August 2021; Accepted: 18 September 2021; Published: 26 September 2021

ABSTRACT

In this paper, factors affecting the solar cell output voltage and efficiency are analyzed by simulation. Mathematical modeling of solar PV system has been developed using MATLAB Simulink. Simulation performance of effect of solar irradiation and PV cell temperature, shunt resistance has been carried out. Also developed solar panel cooling model using DC fans to regulate panel temperature within the acceptable limit.

KEYWORDS: Maximum Power Point Tracking (MPPT), Photovoltaic cell (PV), Solar PV modules, MPPT technique, MATLAB /Simulink, DC fan.

1.INTRODUCTION

Solar energy is the most promising source of renewable energy. The important reasons for this enormous consideration are; 1)Enhancement of solar cell efficiency 2) new technological and manufacturing advancement; 3) green and environmental benign.

Typicalapplications of solar energy are supply the residential loads. It also has a main role indistributed generation system. Presently the efficiency of solar cell is relatively low around 12 to 20 % that means, PV panelcould utilize a little quantity of solar energy. It imposes to design highefficient power electronics converters for solar applications. All the three types of solar cells such as mono-crystalline, polycrystalline and thin film are made of silicon.

A PV cellalone can generate 1 to 2 W only. To produce more power,large number of PV cells are connected in series-parallel arrangement called PV module. Solar cell I-V, P-Vcharacteristics curves are non-linear. These curves play important rolein PV power system.

The quantity of solar energy utilized by PV cell is the function of solar irradiation and ambient temperature.However, the solar cell output voltage and power are also affected bydust, the shadow, rain and snow. The boost converters with MPPT technique, further increases the amount of voltage generated by the PV module using MPPT algorithms. Inverters can be used for converting DC to AC in order to synchronize with the grid with required voltage and frequency range.

An advanced software such as MATLAB/Simulink is very useful in the modeling and simulation of solar physical system. A lumped parameter PV model has been developed thorough the mathematical relations. The simplest model has only one diode and one photocurrent source as function of solar irradiation (Iph). The four-elementmodel has shunt resistance (Rp) and series resistance R_s. Various PV models were proposed by the researchers and each model has its ownadvantages and disadvantages. The effect of temperature and shunt resistance were neglected insome studies. PV panel temperature has significant influence on the solar cell output voltage and efficiency. This paper presents the mathematical modeling and simulation of PV module using MATLAB/Simulink. The P-V and I-V characteristics are discussed considering solar irradiation and ambient temperature. The maximum power point trackers (MPPT) is used to maintain the MPP. So it's minimized the overall cost and maximizes the array efficiency. MPPT typically regulates the terminal voltage of the panel and the MPPT control to extract maximum power from the PV array becomes indispensable in the PV generation system. Also developed a solar panel cooling model using DC fans to regulate panel temperature within the acceptable limit.

II. LITERATURE REVIEW

The effect of solar irradiation and cell temperature on the I-V and P-V characteristics of a single solar cell using MATLAB/Simulink has been presented. Also discussed the effect of minimum parallel resistance on the I-V and P-V characteristics [1], [2]. A single diode equivalent circuit model of solar PV panel (JAP6-72-320/4BB) under MATLAB /Simulink, for the study of I-V and P-V characteristics has been carried out [3]. Detailed study on MPPT algorithm based on incremental conductance using MATLAB Simulink is carried out. The bidirectional DC-DC converter is used with a battery. Considered only incremental conductance MPPT algorithm. Drawback of Incremental conductance is high response time and not suitable for small scale PV systems [4]. Study on the general PV model has been carried out using MPPT technique based on P&O and IC methods [5],[6].The detailed study on solar radiation and temperature effect using two DS-100M PV module connected in series was carried out. The proposed techniques were not sufficient to study all the parameters which can significantly affect I–V and P–V characteristics of solar PV module [7]. One-diode equivalent circuit is employed in order to analyze the I-V and P-V characteristics of a 170W Mitsubishi solar module by Perturb and Observe MPPT algorithm [8]. To design MPPT based on incremental inductance was described in detailed using Simscape software. Type of PV module used for the modeling has been not specified [9]. Comparative study of I-V and P-V characteristics and fill factor on different PV modules has been carried out [10].

III. MODELING OF SOLAR PV SYSTEM

A. Equivalent circuit of solar cell

A real time circuit model of solar PV cell is shown in the Figure.1. This is also is shown as single diode model with series resistance (R_s) and parallel resistance (R_p). In case of ideal solar PV model, the effect of $R_s$and R_p are ignored but in reality, it is not possible to overlook this resistance, because these parameters affect the efficiency of the solar PV cell. So, an accurate model is represented in Fig.1.

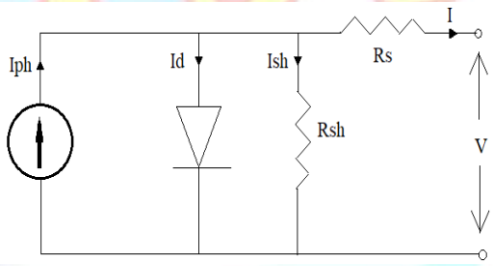

Figure.1: An accurate model of PV cell.

B. Current through shunt resistance

The shunt current PV Modelis developed using Eq. (1) in MATLAB /Simulink. The shunt current depends on mainly two values i.e. terminal voltage and terminal current which are used as input parameters shown in Fig.2.

$$I_{sh} = \frac{V+(IR_s)}{R_{sh}} \quad (1)$$

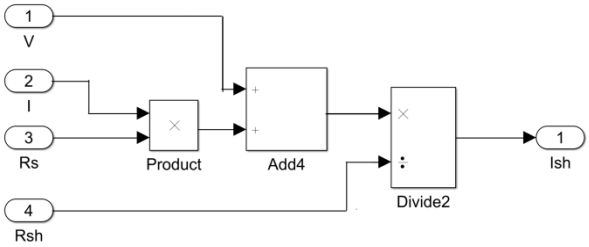

Figure.2: PV Shunt current model.

C. PV diode current

The diode current (I_d) of the PV cell depends on reverse saturation current (I_o) and thermal voltage (V_t). Using Simulink, the I_d is modeled with the parameters effecting as input in the Fig.3 using the eq. (2)

$$I_d = I_0 * [e^{\left[\frac{V+(IR_S)}{N_S n V_t}\right]} - 1] \quad (2)$$

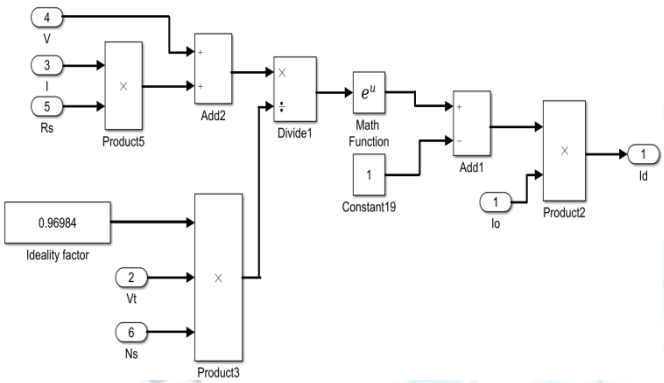

Figure.3: PV diode current model.

D. PV photocurrent model

Model of PV photocurrent act as a subsystem in solar PV modeling which is developed using Eq. (3). The photocurrent behaves linearly on the solar irradiance and is also depends on the operating temperature. The detailed modeling of $I_{ph}$with its subsystem and effect of external factor solar irradiance (I_r) and temperature (T) as input parameters is illustrated in Fig.(4).

$$I_{ph} = [I_{sc} + K_i(T - 298)] * \left[\frac{I_r}{1000}\right] \quad (3)$$

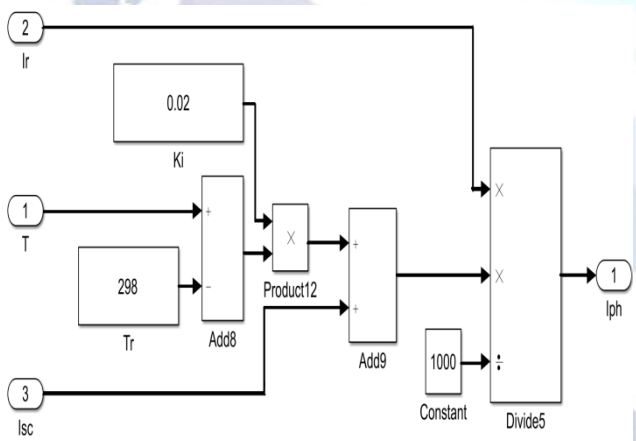

Figure.4: Photocurrent model.

E. PV reverse saturation current model.

In Fig.5 reverse saturation current model is developed by using Eq. (4) considering some constant parameters which are utilized to develop the model.

$$I_0 = I_{rs} * \left(\frac{T}{T_r}\right)^3 * \left[e^{\left[\left(\frac{qE_{bg}}{Kn}\right)*\left(\frac{1}{T_r}-\frac{1}{T}\right)\right]}\right] \quad (4)$$

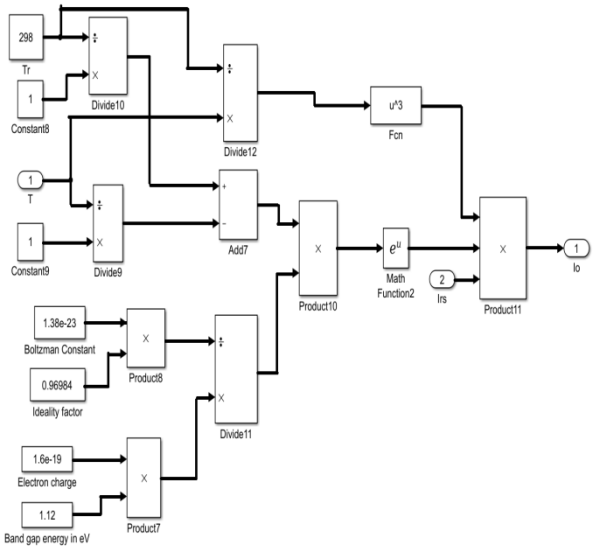

Figure.5: Reverse saturation current model.

F. PV saturation current model

Eq. (5)represents saturation current (I_{rs}) which varies with the cell temperature. The reverse saturation current subsystem model is developed as shown in Fig.6. The energy band gap, electron charge, reference temperature and operating temperature of module are used as input parameters.

$$I_{rs} = \frac{I_{sc}}{\left[e^{\left(\frac{V_{Oc}}{nN_s V_t}\right)} - 1\right]} \quad (5)$$

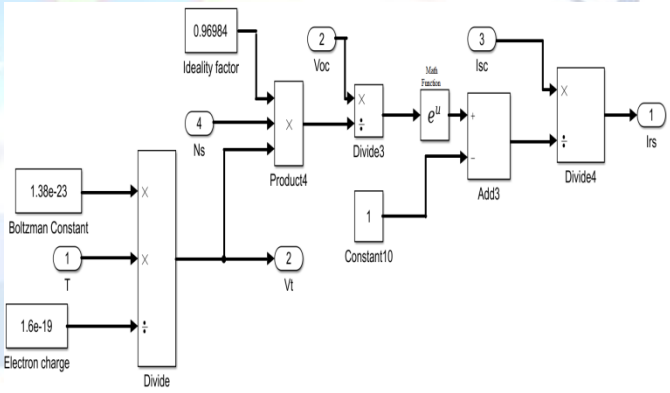

Figure.6: Saturation current model.

G. PV output current model

The PV output current is given by Eq. (6) andis developed in Simulink as illustrated in Fig.7. The output current can be obtained with respect to voltage which is dependent on irradiance and temperature using this Simulink model.

$$I = I_{ph} - I_d - I_{sh} \quad (6)$$

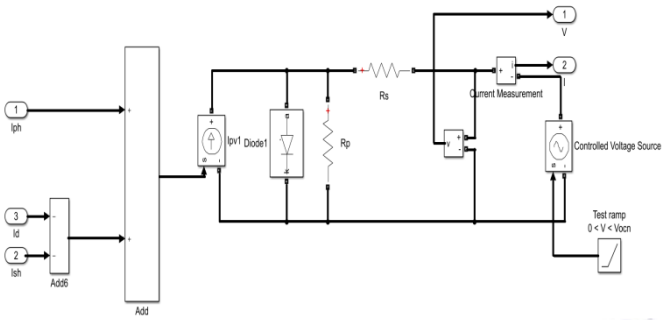

Figure.7: Terminal current model.

H. Interconnected PV Simulink model

The entire subsystem model developed in steps A to Gare connected together to forminterconnected PV model as shown in Fig.8. Final PV module model is illustrated in Fig.9 the final PV solar module model consist of irradiance (I_r) and temperature (T) as the input parameters and provides output current (I) and voltage (V).

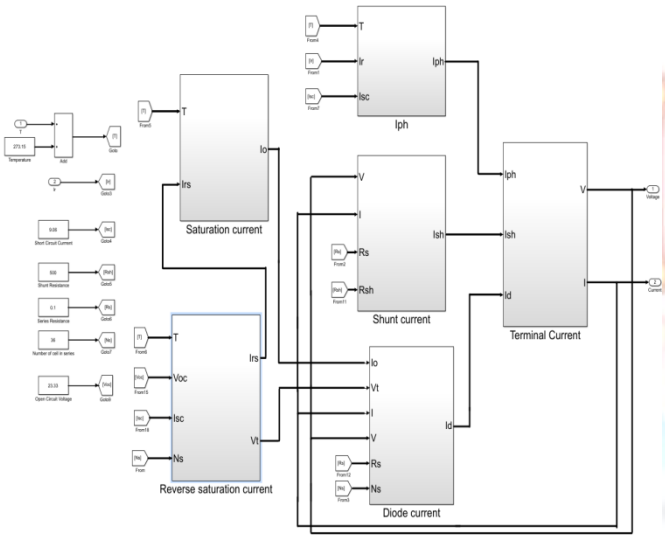

Figure.8: Interconnected Solar PV model.

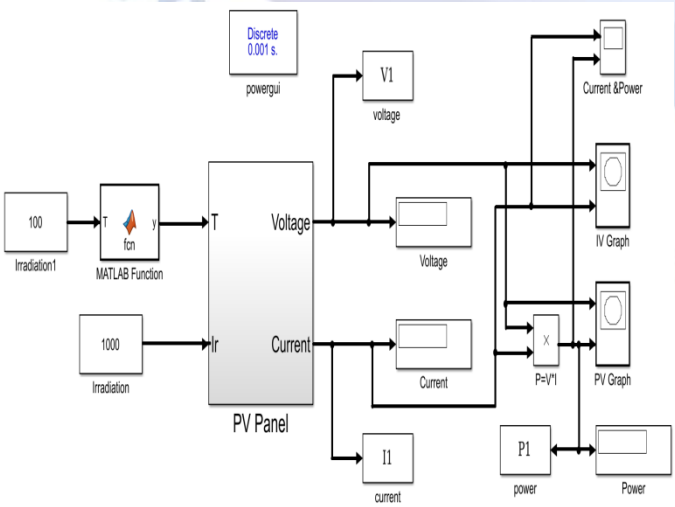

Figure.9: Complete simulation model of PV system

IV. RESULTS AND DISCUSSIONS

A. I-V and P-V characteristics for varying irradiation - at constant temperature (25°C).

I-V and P-V characteristics under varying irradiation with constant temperature are given in Figs.10 and 11 respectively. Here, the solar irradiation changes with values of 100, 200, 400, 600, 800 and 1000 W/ m^2 while temperature was kept constant at 25 °C.From Eq. (3) all the parameters responsible of photo current (I_{ph}) are constant except temperature and irradiation. If we consider temperature constant for varying irradiation, we observe that the photo current (I_{ph}) is directly proportional to the irradiation. Therefore, when the irradiation decreases, there is a significant drop in the PV module output current and a slight decrease in the output voltage as shown in the table I and the results are graphically represented in the Fig 10. The results of decrease in output power are graphically represented in the Fig.11.and also in the table II.

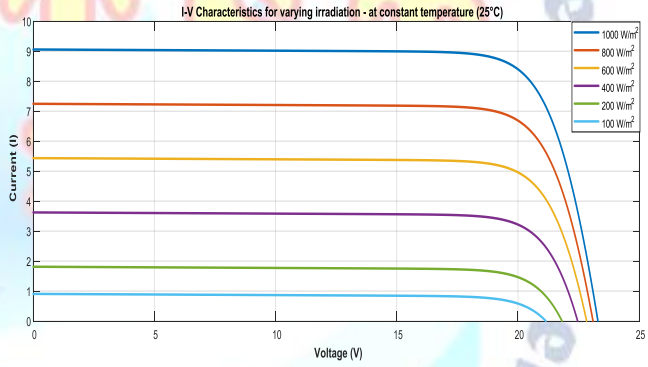

Figure.10: I-V Characteristics for varying irradiation - at constant temperature (25°C).

Table I: PV Module results for varying irradiation - at constant temperature (25°C).

Temperature (°C)	Irradiation (W/m^2)	Current (A)	Voltage (V)
25	1000	9.059	23.28
25	800	7.247	23.1
25	600	5.435	22.82
25	400	3.623	22.44
25	200	1.811	21.79
25	100	0.995	21.14

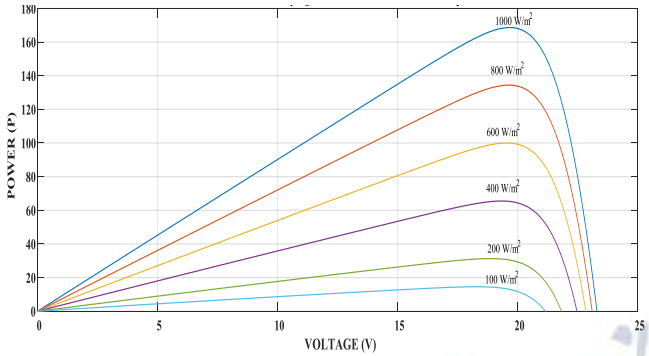

Figure.11: P-V Characteristics for varying irradiation - at constant temperature (25°C).

Table II: PV Module results for varying irradiation - at constant temperature (25°C).

Temperature (°C)	Irradiation (W/m^2)	Power (W)	Voltage (V)
25	1000	168.78	23.28
25	800	134.2	23.1
25	600	99.31	22.82
25	400	65.13	22.44
25	200	30.36	21.79
25	100	12.88	21.14

B. I-V and P-V characteristics for varying temperature - with constant irradiation (1000 W/m²).

The I–V and P–V characteristics under varying temperature and constant irradiation are obtained in Figs.12 and 13respectively. Here, the temperature varies from 25, 35, 55, 65, 75 and 100 °C respectively whereas the irradiation waskept constant at 1000 W/m^2 .The normal operating temperature for domestic use solar module is in the range of 15°C to 35°C.Between15°C to 35°Cpanel temperature, the solar module gives its maximum efficiency. But the temperature can increase up to 75°C.For higher temperature, the bandgap of electron decreases this results in lower energy requirement for breaking the bandgap of electron. Thus, affecting the net amount of photocurrent in the module. Therefore, as the operating temperature increases, the current output rises marginally but the voltage output decreases drastically as shown in the table III and is graphically represented in the Fig 12. This leads to net decrease in power output with rise in temperature as shown in the table IV and is graphically represented in the Fig.13.

Table III: PV Module results for varying temperature - with constant irradiation 1000 W/m^2.

Irradiation (W/m^2)	Temperature (°C)	Current (A)	Voltage (V)
1000	25	9.059	23.28
1000	35	9.259	21.84
1000	55	9.659	18.99
1000	65	9.859	17.54
1000	75	10.06	16.14
1000	100	10.56	12.55

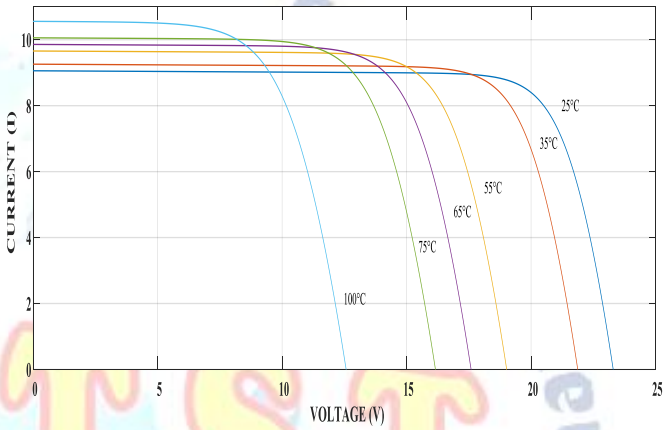

Figure.13: I-V Characteristics for varying shunt resistance.

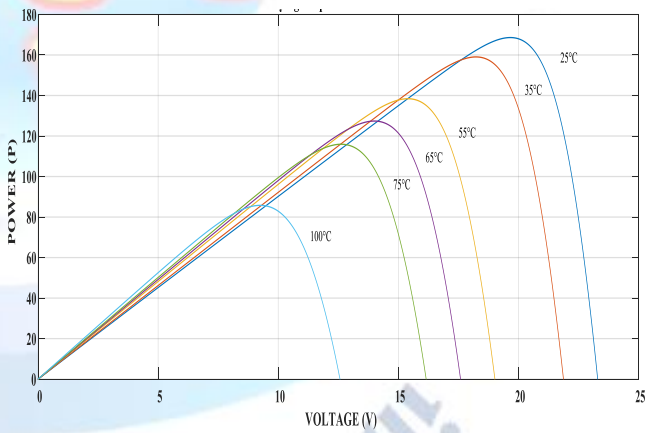

Figure.14: P-V Characteristics for varying temperature - with constant irradiation (1000 W/m^2)

Table IV: PV Module results for varying temperature - with constant irradiation 1000 W/m^2.

Irradiation (W/m^2)	Temperature (°C)	Power (W)	Voltage (V)
1000	25	168.9	23.28
1000	35	158.2	21.84
1000	55	138.4	18.99
1000	65	127.4	17.54
1000	75	115.8	16.14
1000	100	85.78	12.55

C. I-V and P-V characteristics for varying shunt resistance.

TheI–V and P-V characteristics under varying shunt/parallel resistance R_{sh} at constant temperature and irradiation are shown in Fig.15 and 16 respectively. In this case, R_{sh}values area considered as 1, 10, 50 and 500 Ω, respectively.Lower shunt resistance causes reduction in the output voltage and power. Normally the shunt resistance of solar cell will be very high; due to this only a fraction part of photo current (I_{ph}) enters through the shunt resistance. If shunt resistance is reduced, the amount of photo current (I_{ph}) flowing through the shunt resistance increases which causes power loss. When R_{sh} varies between 500 to 10Ω, the current output and voltage output decreases slightly as shown in the table V and is graphically represented in the Fig 15 and this results in slight net increase in power output as shown in the table VI and is graphically represented in the Fig.16. However, a significant decrease in current, voltage and power output are recorded when the value of R_{sh} is 1 Ω.

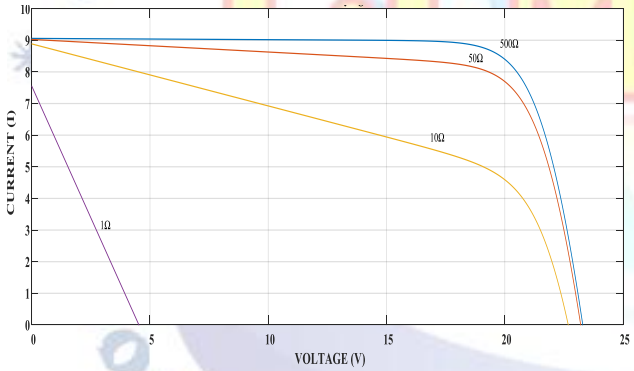

Figure.15.P-V Characteristics for varying shunt resistance.

Table V: PV Module results for varying shunt resistance.

Shunt resistance (Ω)	Current (A)	Voltage (V)
500	9.059	23.28
50	9.027	23.19
10	8.885	22.68
1	7.552	4.526

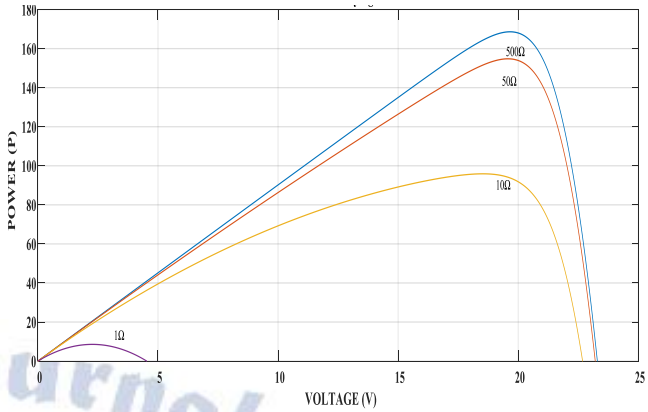

Figure.16: P-V Characteristics for varying shunt resistance.

Table.VI: PV Module results for varying shunt resistance.

Serial Number	Shunt resistance (Ω)	Power (W)	Voltage (V)
1	500	168.6	23.28
2	50	154.8	23.19
3	10	95.89	22.68
4	1	8.555	4.526

D. Installation of DC Fan Cooling Mechanism with Forced Convection

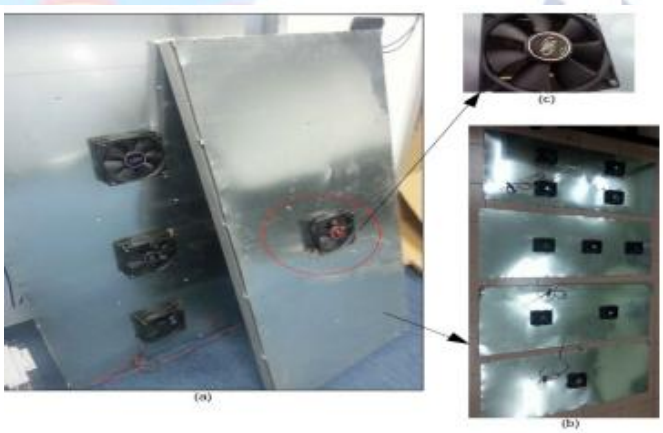

Figure.17: DC fan cooling mechanism.

The experimental arrangement of forced convection with DC fan cooling mechanism is as in Fig.17. Heat produced by solar panel is extracted by using DC fan cooling mechanism installed at the back side of PV panel with zinc sheet which helps in the heat transfer. The cooling mechanism using DC fan is operated in four modes each mode of operation is carried out by a different units of DC fan. Four units are installed for each PV panel.

The DC fans are installed in such a position that air from outside enters to the backside of PV panel. Generally, the density of cool air is higher than the hot air. Therefore, cool air from the outside environment will cool down the PV panel by removing the hot air generated by the PV panel. The specifications of DC fan used are same i.e voltage rating: 12 V, current rating of 0.1 A. The power rating of each motor is 0.84 W to run the fan. Additionally, each DC fan could remove heat generated with their maximum airflow characteristic of 44.7 cubic feet per minute.

As we know the efficiency of the solar module is around 15-20% which is very low, and the external factors responsible for the efficiency of solar module are temperature, irradiation, dust, shadow etc. Among these above factors we cannot control irradiation, but other factors i.e. dust, shadow and temperature can be controlled. Now among these factors temperature is the major parameter to be controlled to try to obtain maximum efficiency. The output power of the solar module is inversely proportional to the temperature of the solar module. As the output power decreases the efficiency of the solar module also decreases.

To mitigate the problem of temperature, an algorithm has been implemented (Fig.18) which controls the module temperature to the normal operating temperature. This algorithm can be implemented in real time by installing cooling fans below the solar module as shown in fig.17.

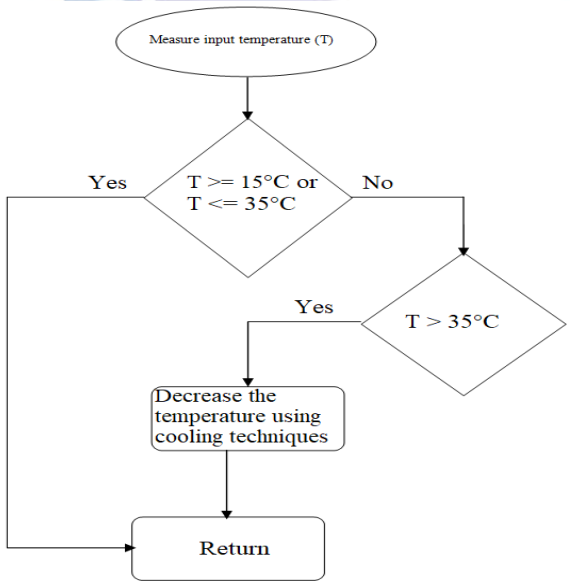

Fig.18. Flow chart of DC fan cooling mechanism algorithm.

i. ***I-V and P-V Characteristics for Varying Temperature and Irradiation***

The I-V and P-V characteristics under varying temperature (T) and varying irradiation (I_r) are shown in the Figs 19 and 20respectively. In this case the value of temperature and irradiation changes randomly. Practically we will not have constant temperature or constant irradiation throughout the day so, the output voltage and output power will vary drastically as shown in the table VII and VIII and are graphically represented in the Fig 19and 20. From the above two factors irradiation cannot be controlled, but we can control the temperature by using cooling technique.

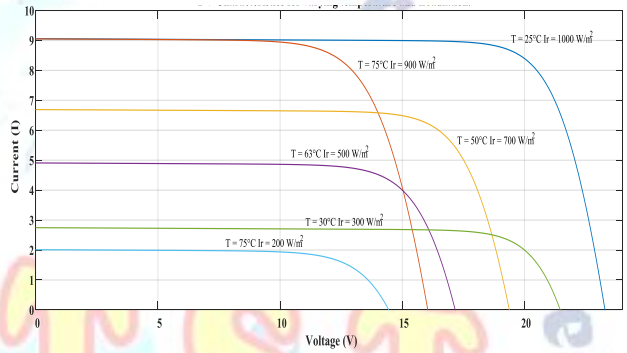

Fig 19: I-V Characteristics for varying temperature and irradiation.

Table VII: PV module results for varying temperature and irradiation.

Temperature (°C)	Irradiation (W/m^2)	Current (A)	Voltage (V)
25	1000	9.053	22.96
75	900	9.053	15.68
50	700	6.691	18.94
63	500	4.91	16.61
30	300	2.748	20.53
75	200	2.012	12.74

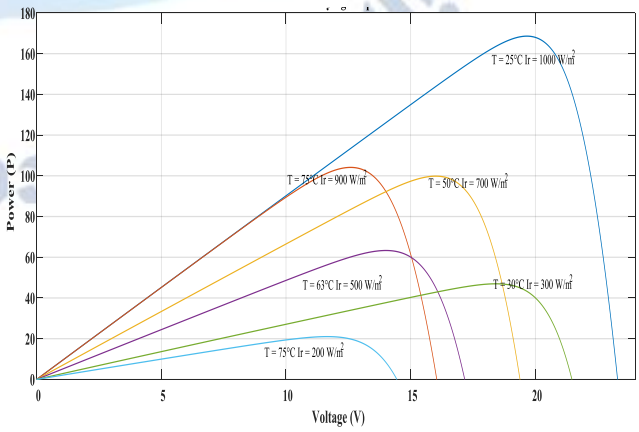

Fig 20: P-V Characteristics for varying temperature and irradiation.

TableVIII: PV module results for varying temperature and irradiation.

Temperature (°C)	Irradiation (W/m^2)	Power (W)	Voltage (V)
25	1000	168.6	23.28
75	900	104.1	16
50	700	99.84	19.36
63	500	63.31	17.12
30	300	46.96	21.46
75	200	21.02	14.42

ii.*I-V and P-V Characteristics for Varying Temperature and Irradiation Using DC fan*

I-V and P-V characteristics under varying temperature (T) and varying irradiation (I_r) using temperature control algorithm are shown in the Figs. 21 and 22respectively. In this case, the values of temperature and irradiation changes randomly. When the temperature changes the cooling mechanism tries to maintain the module temperature to a desired value and the output power and voltageremains stable. The results are presented in able IX and X.

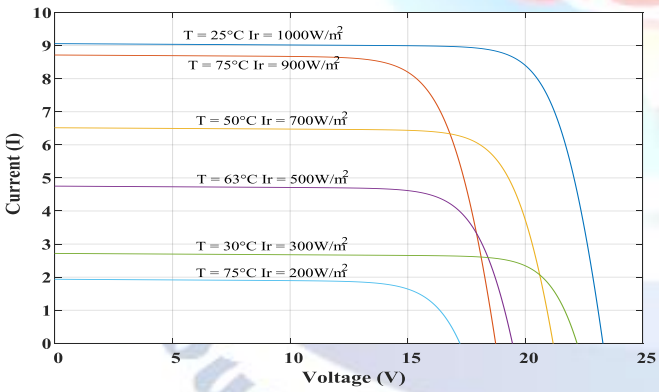

Fig.21: I-V Characteristics for varying temperature and irradiation with cooling technique

Table IX: PV module results for varying temperature and irradiation with cooling technique.

Temperature (°C)	Irradiation (W/m^2)	Current (A)	Voltage (V)
25	1000	9.059	23.28
75	900	8.716	18.71
50	700	6.516	21.14
63	500	4.752	19.41
30	300	2.718	22.16
75	200	1.937	17.17

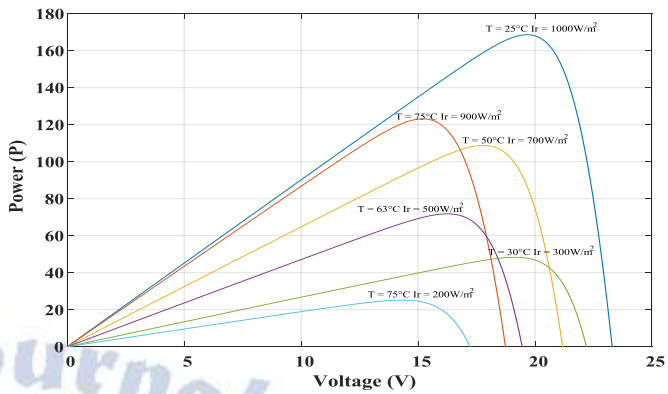

Fig. 22: P-V Characteristics for varying temperature and irradiation with cooling technique.

Table X: PV module results for varying temperature and irradiation with cooling technique.

Temperature (°C)	Irradiation (W/m^2)	Power (W)	Voltage (V)
25	1000	168.6	23.28
75	900	123.1	18.71
50	700	108.8	21.14
63	500	71.81	19.41
30	300	48.34	22.16
75	200	25.19	17.17

V. CONCLUSION

In this paper, an accurate single diode equivalent circuit model of PV solar module has been developed. Step by step method for simulating a PV solar module using MATLAB/Simulink is presented. Using the simulation model performance analysis of effects of solar irradiation, PV cell temperature and shunt resistance on I-V and P-V characteristics have been carried out. Also implemented PV panel cooling technique using DC fan and an algorithm presented which maintains panel temperature constant. These performance characteristics are useful in improving the efficiency of PV panels and manufacturing techniques.

REFERENCES

[1] Navdeep Singh et al., "Study of P-V and I-V Characteristics of Solar Cell in MATLAB/ Simulink", International Journal of Pure and Applied Mathematics, Volume 118, No. 24 2018.

[2] Dharmendrakumar Singh et al., "Design and Simulation of Photovoltaic System in MATLAB using Simulink", International Journal on Future Revolution in Computer Science & Communication Engineering, Volume: 4 Issue. 4.

[3] Vinod, et al., "Solar photovoltaic modeling and simulation: As a renewable energy solution", Article.

[4] MirzaMursalin Iqbal et al., "Design and Simulation of a PV System with Battery Storage Using Bidirectional DC-DC Converter Using MATLAB Simulink", International journal of scientific & technology research volume 6, issue 07, July 2017.

[5] Sandeep Neupane., et al, "Modeling and Simulation of PV array in MATLAB/Simulink for Comparison of Perturb and Observe & Incremental Conductance Algorithms Using Buck Converter", International Research Journal of Engineering and Technology (IRJET), Volume.4, Issue.7, July 2017.

[6] Rajaram Chandra Meena et al., "Mathematical Modeling of photovoltaic cells Using MATLAB/Simulink and MPPT Techniques", International Journal of Advanced Research in Electrical, Electronics and Instrumentation Engineering, Vol. 4, Issue 8, August 2015.

[7] XuanHieu Nguyen, et al, "Mathematical modeling of photovoltaic cell/module/arrays with tags in MATLAB/Simulink", Article.

[8] L Siva Chaitanya Kumar, et al, "MATLAB/Simulink Based Modelling and Simulation of Residential Grid Connected Solar Photovoltaic System", International Journal of Engineering Research & Technology (IJERT), Vol. 3, Issue.3, March 2014.

[9] GunjanVarshneyet al, "Simscape Based Modelling & Simulation of MPPT Controller for PV Systems", IOSR Journal of Electrical and Electronics Engineering (IOSR-JEEE) e-ISSN: 2278-1676,p-ISSN: 2320-3331, Volume 9, Issue.6,Nov -Dec. 2014, pp. 41-46.

[10] Mohammad Seifi et al, "A Comparative Study of PV Models in MATLAB/Simulink", International Journal of Electrical and Computer Engineering, Vol: 7, no. 2, 2013.