International Journal for Modern Trends in Science and Technology, 6(8S): 53-57, 2020

ISSN: 2455-3778 online
DOI: https://doi.org/10.46501/IJMTSTCIET11
Available online at: http://www.ijmtst.com/ncracse2020.html

Generation of Green Electrical Energy by using IOT

V Naga Siva Rama Murthy[1] | Suresh Jajula[1]| Devdas Pitta[1]

[1]Assistant Professor, Electrical and Electronics Engineering, Ramachandra College of Engineering, Euru, Andhra Pradesh, India

To Cite this Article

V Naga Siva Rama Murthy, Suresh Jajula and Devdas Pitta, "Generation of Green Electrical Energy by using IOT", *International Journal for Modern Trends in Science and Technology*, 6(8S): 53-57, 2020.

Article Info

Received on 16-July-2020, Revised on 15-August-2020, Accepted on 25-August-2020, Published on 28-August-2020.

ABSTRACT

The aim of this project is to design and construct a solar charge controller, using mostly discrete components. The charge controller varies its output to a step of 12V; for a battery of 200Ah rating. The design consists of four stages which include current booster, battery level indicator, battery charge controller and power supply unit. The designed system is very functional, durable, economical, and realizable using locally sourced and affordable components. This work is a prototype of a commercial solar charge controller with protection systems that will prevent damages to the battery associated with unregulated charging and discharging mechanisms.

This paper is to reduce the human intervention for farmers and use solar energy for irrigation purpose. The entire system controlled by the PIC microcontroller.

The solar PV panels have proven through a period of time that they are unfailing to produce adequate electricity directly from solar radiation. The demand for water in any irrigation system varies throughout the complete year in any particular area. This paper proposes the use of solar power for irrigation purposes. Solar powered water pumping systems can be the most perfect and suitable solution for rural locations which are grid isolated in poor countries where the amount of solar radiation are very high. Solar powered water pumping systems (SPPS) can be used to supply to basic needs of the community like providing drinking water, water for irrigation etc. Without the

Need for any kind of fuel or wide-ranging maintenance.

KEYWORDS: indicator, booster, Controller, Protection, discrete, water pump, picmicrocontroller, time slots

INTRODUCTION

From olden days we are using conventional sources of energy in large amount for our basic needs. As non-renewable minerals like coal are exhausting, we have to depend on the non-conventional sources of energy like solar ,wind , tidal etc. For any small application it is better to use renewable energy. Now days, renewable energy has many day to day applications. India is a country in which the major income is from farming sector. So, an effort has been put to use solar energy in irrigation systems. Most of the existing renewable system is manual. The manual system needs far-reaching labour for continuously monitoring the yield and health crop. Taking into account labour's salary, the manual system will cost more than the automatic system, in which there is no assistance to the system. The farmer himself has to continuously check whether the moisture level of the soil is maintained and has to make a conclusion whether the field requires sufficient water or not. This way of inspecting the

moisture level is not precise all the times and this negative aspect can be eliminated by using soil moisture sensor. Moreover, the temperature essential for the crops to nurture will diverge for a range of crops. If the temperature increases or decreases than the expected temperature, it may have an effect on the quality of the crops. This problem can be overcome by using the shielding mechanism, which maintains the looked-for temperature.

Larger SPPS (Solar powered pumping systems) can deliver around 1,40,000lts of water per day from a total head of 10 meters. The ARDUINO will convert these values into decimal and compare it with the time that has been given as input using the keypad. The ARDUINO will check if the RTC time is equal to the input time entered by the user.

II. CONCEPT OF SOLAR POWERED SYSTEMS AND REAL TIME CLOCK

Solar powered systems are highly proposed system for regular usage in many developing countries rather than any other forms of non-conventional energy because they are very durable and has long-term economic profits . Solar water pumps are used mainly in very small scale or any community based irrigation fields. Large scale irrigation requires excessive amount of water for irrigation which results in a extremely large size solar pv array. But during rainy season, we do not necessarily require a large pv array. This leads to wastage of excess energy and makes the system less efficient. Solar pv water pumping systems are mainly used for irrigation and drinking water purposes in india. Larger spps (solar powered pumping systems) can deliver around 1,40,000lts of water per day from a total head of 10 meters. A large-scale spps can serve well over 250 people at any instant of time

The main power source is the solar panel which provides energy to charge a battery. A separate circuit is also added to control charging as well as the current transmission constant. In the proposed system, when the battery is charged long enough, it drives the water pump, i.e. The load, for a proper timing. As it can be clearly seen from the block diagram that the load is connected to a relay in between the charging unit and relay which actually drives the load.

there is one additional feature in the setup. a rtc (real time clock)is been interfaced to the microcontroller .the on/off time of the water pump is controlled by the timing that we set in this feature.

III.SOFTWARE IMPLEMENTATION

It is actually a core component and it is included with all the product configurations. Figure 1 shows the schematic model of the solar powered systems RTC (cr2032) is interfaced with arduino. The rtc provides the pic with 7 inputs namely: seconds, minutes, hours, days, weeks, months and years. The rtc gives those values in bcd so that it can be displayed on the lcd easily. The arduino will convert these values into decimal and compare it with the time that has been given as input using the keypad. The arduino will check if the rtc time is equal to the input time entered by the user. If so, the pic sends a signal to the relay, which closes the circuit to the motor. This will essentially make the motor to runhardware implementation

IV THE HARDWARE IMPLEMENTATION OF SOLAR CHARGED CONTROLLER CONSISTS OF VARIOUS COMPONENTS SUCH AS

ARDUINO UNO, LCD, RTC, RELAY, KEYPAD, LED, CRYSTAL, DIODES, REGULATOR, CAPACITORS, RESISTORS, MOTOR, SOLAR PANEL, OP-AMPS, MOSFET, POTENTIOMETERS, BATTERY

Arduinouno

The Arduino project provides the Arduino integrated development environment (IDE), which is a cross-platform application and it is written in the programming language Java. It is sourced from

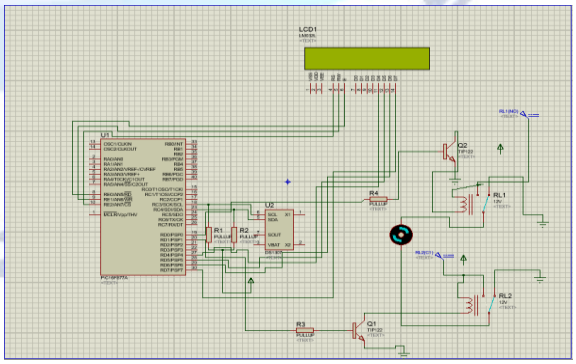

FIGURE1: SOFTWARE IMPLEMENTATION OF SOLAR CHARGE CONTROLLER FOR IRRIGATION PURPOSE

IDE for the languages Processing and Wiring. It

has a code editor with various features like to cut the text and to paste, to search and to replace text, for automatic indent, matching of braces, and highlighting of syntax. Compile and upload programs are done by a simple one-click mechanism and given to an Ardiuno board. It also contains a message area, a text console, a toolbar with buttons for common functions and a hierarchy means of operation.

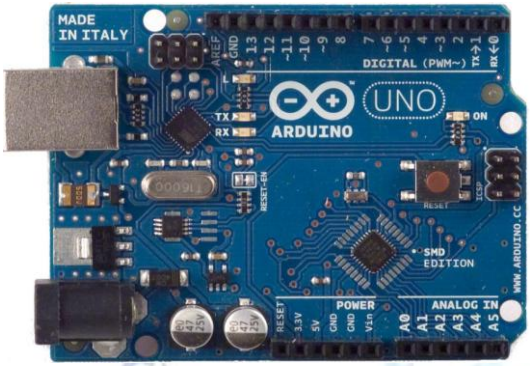

Figure 2: Front view of the Arduino board

Arduino/Genuine Uno is a microcontroller board based on the atmega328p (datasheet). It has 14 digital input/output pins (of which 6 can be used as PWM outputs), 6 analog inputs, a 16 mhz quartz crystal, a USB connection, a power jack, an ICSP header and a reset button. Figure 3 shows the front and rear view of the Arduino board.

SOLAR PANEL

A photovoltaic system typically has a package which contains an array of photovoltaic modules, an inverter along with a battery pack for storage, interconnection wiring. The solar tracking mechanism is optional and it can be included in the package if high accuracy is expected. The size of the PV panel is dependent on the size of the pump that we choose for irrigation purpose. Larger the pump size, larger the solar panel will be come. In this project we use a 12v rating solar panel to produce electricity for pumping purpose.

Figure 3: 12v solar panel

RTC (Real time clock)

CR2032 is a low cost, easy to handle, real-time clock chip. It works for many years on a very small coin cell. It has a power-sense circuit built inside to identify power failures. In case of any power failure, it automatically switches to the backup supply. Even when the part operates from the backup supply, the time operation will continue. A 3V coin cell (lithium battery) must be installed for the RTC to work. If there is no coin cell, the battery pin (VBAT) should be pulled to low.

Figure 5: real time clock

KEYPAD

Keypads are fundamentally a part of Human Machine Interface (HMI) It plays a key role in a small embedded system where human communication and human input is required. They are well known for its simple architecture.

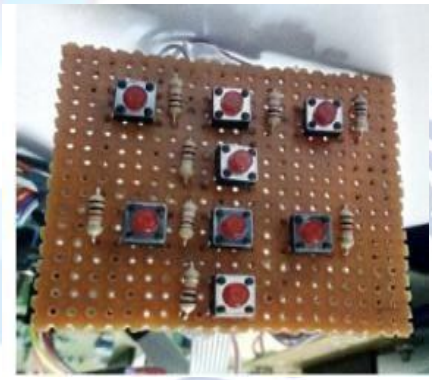

Figure4:Hardware Implementation of keypad

RELAY MODULE

Relay is an electrical switch that uses an electromagnet to automatically move the switch from the OFF position to the ON position instead of a person manually moving the switch.

Figure 5: relay module

PUMP

If the size of the pump that we use for the irrigation increases, it will also increase the size of the PV array that we use in the system. So to justify the role of solar power in pumping, a small power rating pump has been used in the setup. In large scale, the chemical injection pumps emit raw gas into the atmosphere. The use of solar powered pump can reduce the greenhouse gas emissions. Figure 7 shows the miniature pump used for the proposed small scale irrigation model.

Figure 6: circulating pump

V. WORKING

This project deals with a Light Intensity RTC based solar panel tracking system. Solar tracking enables more energy to be generated because the solar panel is always able to maintain perpendicular profile to the sun's rays. As the sun moves across the sky during the day, it is advantageous to have the solar panels track the location of the sun, such that the panels areal ways perpendicular to the solar energy radiated by the sun. This will tend to maximize the amount of power absorbed by PV systems. It has been estimated that the use of a tracking system can increase the power output by 30%-60%. The increase is significant enough to make tracking available preposition despite of the enhancement in system cost. It is possible to align the tracking heliostat normal to sun using electronic control by a microcontroller.

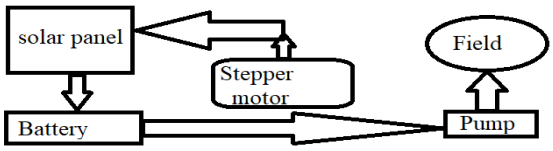

Figure 7: block diagram for solar charge controller for irrigation system

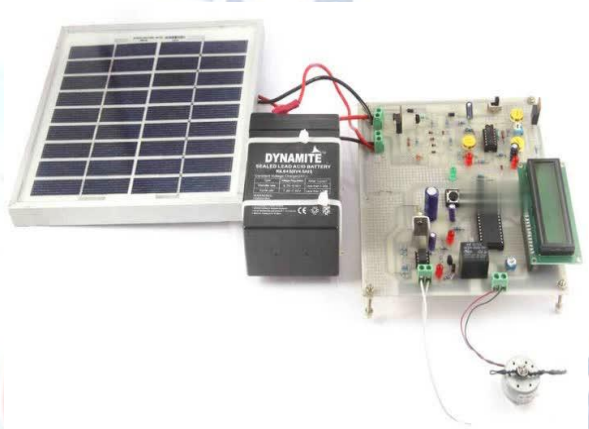

Figure 8 : practical implementation solar charge controller for irrigation system

VI. FLOW CHART

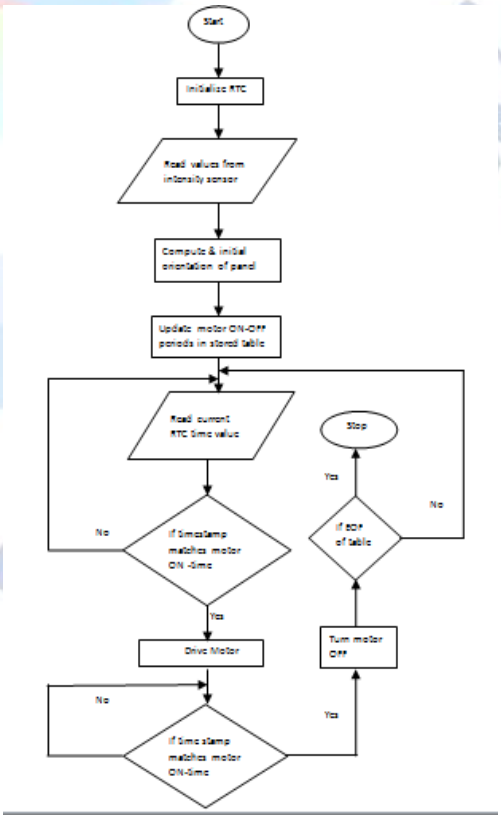

Fig.9.flow diagram

VI. CONCLUSION

By this process we can produce a clean and green power. Thus electrical power can be generated in rural areas itself at very low cost. This will reduce our dependence on Non-Renewable resources like coal and oil. This has the capability of replacing all the power plants which are using Non-Renewable resources. A solar tracker is designed employing the new principle of using small solar cells to function as self-adjusting light sensors, providing a variable indication of their relative angle to the sun by detecting their voltage output. By using this method, the solar tracker was successful in maintaining a solar array at a sufficiently perpendicular angle to the sun

REFERENCES

[1] VNSR Murthy and pandian (2017),"Analysis of capacitor voltage Balance in Multilevel Inverter", International Journal of Applied Engineering Research, SI volume-12 No-1, pp-399-406 ISSN: Number: 0973-4562

[2] VNSR Murthy, A. Pandian and M. Venu Gopala Rao (2017),"Comparative Analysis of different Modulation Techniques for Multilevel Diode Clamped Inverter with Boost Converter", International Journal of Control Theory and Applications-ISSN Number: 0974-5572

[3] VNSR Murthy, M. Venu Gopala Rao and A. Pandian (2016),"Performance Analysis of PWM Control of Three-Phase Boost-Derived Hybrid Converter ", International Journal of control Theory and Applications, Vol: 9, pp: 6209-6220, October 2016-ISSN Number: 0974-5572

[4] Fahrenburch,A.andbube,R.1983,Fundamentalsofsolarcells,academicpress,newyork.

[5] Partain,L.D.1995,sollarcellsandtheirapplications,johnwiley &Sons.newyork.