Available online at: http://www.ijmtst.com/vol6issue04.html

International Journal for Modern Trends in Science and Technology

ISSN: 2455-3778 :: Volume: 06, Issue No: 04, April 2020

Stand Alone PV- Battery-Based Hybrid Microgrids with Electric Vehicle for Unified Control and Power Management Scheme

Dhavala Pranusha[1] | Thumuganti Ramya[1] | Kandakatla Vishnu[1]

[1]Assistant Professor, Department of EEE, Vignan Institute of Technology and Science, Hyderabad, Telangana, India.

To Cite this Article

Dhavala Pranusha, Thumuganti Ramya and Kandakatla Vishnu, "Stand Alone PV- Battery-Based Hybrid Microgrids with Electric Vehicle for Unified Control and Power Management Scheme", *International Journal for Modern Trends in Science and Technology*, Vol. 06, Issue 05, May 2020, pp.: 324-331.

Article Info

Received on 16-March-2020, Revised on 24-April-2020, Accepted on 26-April-2020, Published on 30-April-2020.

ABSTRACT

In this proposal a power matrix support the board framework to effectively deal with a photovoltaic (PV) fueled vehicle. Methods of electrical evaluating reproduction (EAR, even, range and flat arrangement) are utilized and kept up as per driving states (the early development state, speed state, quick state) to expand the increasing speed. Since the level strategy gives a ton of voltage and torque, the speed is utilized to look after speed. At that point the flat range strategy is utilized at the quickest speed after the vehicle begins when both speed and torque requi. For a productive test, a photovoltaic based vehicle with a 2.65 m sun based cell has been set up, with an assortment of engine starting torque results giving a 1.4 occasions higher torque proportionate to the parallel-go type 2.5 occasions the arrangement title. So the level exhibit of reconfiguration type is appropriate for beginning the vehicle. When testing the greatest speed of the engine, the scope of results run is double the engine speed of the even range type, and 4.1 occasions higher than the flat. So the scope of the arrangement is reasonable for a vehicle at high speeds. In this strategy an engine increasing speed in the photovoltaic-based vehicle uncovered consequences of superior to 38 percent contrasted with a scope of arrangements.

KEYWORDS: *Solar PV System, Battery, Control and Power Management System, Distributed Energy Resource, Microgrid, Power Electronics, Electrical vehicle.*

I. INTRODUCTION

Constantly expanding interest for vitality and worries of ecological weakening have been impelling electric power specialists to discover maintainable techniques for power age. Dispersed ages (DG) as inexhaustible assets, for example, sun oriented vitality, are accepted to give a compelling answer for lessen the reliance on ordinary power age and to upgrade the unwavering quality and nature of intensity frameworks [1]. Photovoltaic (PV) control frameworks have turned out to be a standout amongst the most encouraging sustainable age advancements in light of their alluring qualities, for example, plenitude of sunlight based and clean vitality. Quick PV innovation improvement and declining establishment costs are additionally invigorating the expanding organization of PV in power frameworks. Be that as it may, because of the idea of sunlight based vitality and PV boards, immediate power yield of a PV framework depends generally on its working condition, for example, sun powered

irradiance and encompassing temperature, bringing about consistent changes in the yield control [2], [3]. In this manner, to keep up a dependable yield control, battery stockpiling frameworks are generally coordinated with PV frameworks to address the changeability issue.

A run of the mill arrangement of PV-battery framework is represented in Fig. 1, which is a half and half microgrid framework comprising of a PV exhibit that contains various PV boards, battery bank for power stockpiling, and a brought together bidirectional inverter that interfaces the DC to AC control framework [4], [5]. A unidirectional DC/DC converter is introduced to control the intensity of PV exhibits, while the battery bank is charged/released by controlling a bidirectional converter that connects the battery and the DC transport. DC loads are provided through direct association with the DC transport and AC loads and the purpose of basic coupling (PCC) is situated on the AC side. Before interfacing with the utility network, a transformer is utilized to venture up the AC voltage to that of the matrix. The PV-battery framework can be working in either network associated or islanded modes by changing the breaker status at the PCC, subject to the state of the framework and the matrix, e.g., a genuine blame on the AC transport may require opening the breaker to keep the back-nourishing current from the lattice [6]. Since PV yield power and load request may change always amid multi day, the power the board calculations for PV-battery framework are required to deal with the power stream and immediately react to any change to keep up the harmony between power creations and utilizations. Moreover, both DC transport and AC transport voltages must be balanced out paying little respect to changes in the framework to guarantee a solid power supply.

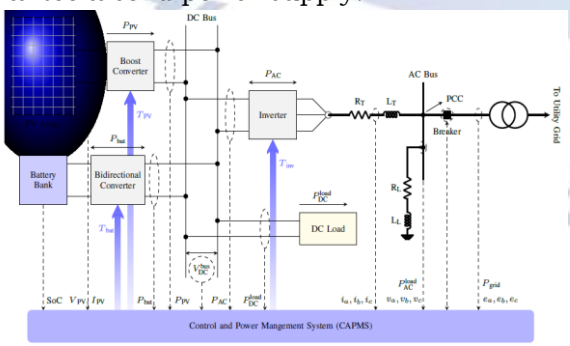

Fig. 1. The proposed control and power the executives framework (CAPMS) for PV-battery-based cross breed microgrids.

framework in [12] controls the AC transport voltage by the hydropower generator and deal with the dynamic and receptive power by the PV-battery unit, and Ref. [13] presents a comparative strategy for a half and half PV-battery-diesel framework. Notwithstanding, both these calculations neglect to consider the voltage control for the situation where the hydropower or diesel generator is out of administration. A decentralized technique for an islanded PV-battery framework is exhibited in [14]. Ref. [15] presents a comparable technique which just goes for singlephase low voltage islanded microgrids. The topology of the examined framework, where PV and battery bank are interfaced with the network utilizing decentralized inverters, is unique in relation to the framework design of this investigation. Comparable techniques utilizing day ahead information for power forecast of a PV-battery framework are proposed in [17] and m[18], which depend on unique programming . All these four strategies predominantly center around determining the power age and request, and planning the power stream of PV or battery, rather than explicit control calculations. Furthermore, there are likewise works attempting to deal with the power all the more viably by utilizing new topologies of converters [20]– [22] as opposed to adjusting controlling strategies. None of the works in the audited writing considers the adjustment of the DC transport voltage, which is of incredible significance for dependable power supply for DC loads. While trying to address the issues talked about over, this paper proposes a control and power the board framework (CAPMS) for PV-battery frameworks, which is an incorporated control framework that adaptably and successfully controls control streams among the power sources, burdens, and utility matrix. The proposed technique prevails with regards to directing the voltage on both DC and AC transports, exchanging between network associated and islanded working modes easily, and adjusting power rapidly in the half and half PV-battery framework.

II. PHOTOVOLTAIC INVERTER

The PV control age framework comprises of following real squares:

1. PV unit
2. Inverter
3. Grid
4. MPPT

Investigative models are basic in the dynamic execution, strength, and dependability examination of various control methodologies. To

explore these highlights on a three-stage framework associated PV framework, the numerical model of the framework should be determined. The demonstrating of the proposed framework incorporates:

1. Photovoltaic Cell and PV exhibit Modeling
2. Three-stage inverter show
3. Three-stage principal changes demonstrating

In this part, the activity and job of every one of these segments will be portrayed and their scientific model will be inferred.

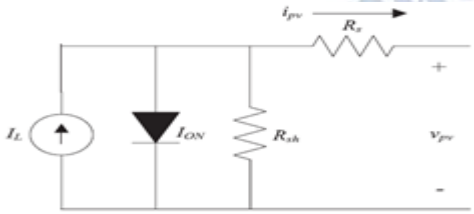

Fig.2 Equivalent circuit diagram of the PV cell

$$i_{pv} = I_L - I_s[\exp[\alpha(v_{pv} + R_s i_{pv})] - 1] - \frac{v_{pv} + R_s i_{pv}}{R_{sh}}$$

2.1 MPPT: (Maximum Power Point Tracking)

The P&O calculation requires couple of numerical computations which makes the usage of this calculation genuinely straightforward contrasted with different methods. Therefore, P&O technique is vigorously utilized in sustainable power source frameworks.

2.1.1 Perturb and Observe calculation

At present, the most mainstream MPPT technique in the PV frameworks is annoy and watch. In this strategy, a little annoyance is infused to the framework and if the yield control builds, a bother with a similar bearing will be infused to the framework and if the yield control diminishes, the following infused irritation will be the other way.

The Perturb and watch calculation works by intermittently annoying (for example increasing or decrementing) the exhibit terminal voltage and contrasting the PV yield control and that of the past bother cycle.

On the off chance that the PV cluster working voltage changes and power builds, the control framework moves the PV exhibit working point toward that path, generally the working point is moved the other way.

In the following bother cycle, the calculation proceeds similarly. The rationale of calculation is appeared in Fig.2.2. A typical issue in irritate and watch calculation is that the cluster terminal voltage is bothered each MPPT cycle, hence when the greatest power point is achieved, the yield control sways around the most extreme power point bringing about power misfortune in the PV framework.

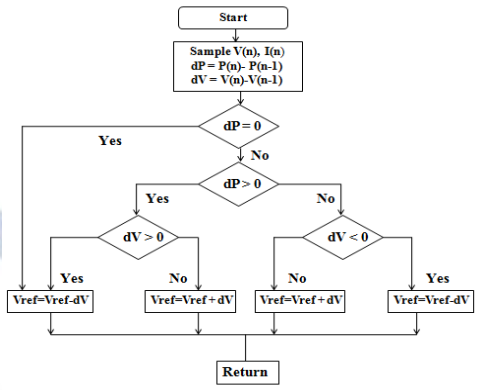

Fig.3 Flow chart of perturb and observe

2.3. BUCK CONVERTER

In this circuit the transistor turning ON will put voltage Vin toward one side of the inductor. This voltage will in general achieve the inductor current to rise. Right when the transistor is OFF, the present will continue coursing through the inductor anyway now traveling through the diode.

We at first acknowledge that the current through the inductor does not accomplish zero, along these lines the voltage at Vx will presently be only the voltage over the main diode in the midst of the full OFF time. The typical voltage at Vx will depend on upon the ordinary ON time of the transistor gave the inductor current is determined.

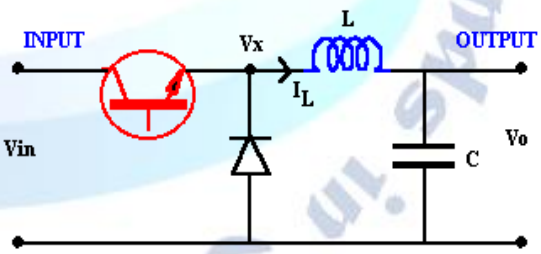

Fig 4 Buck Converter

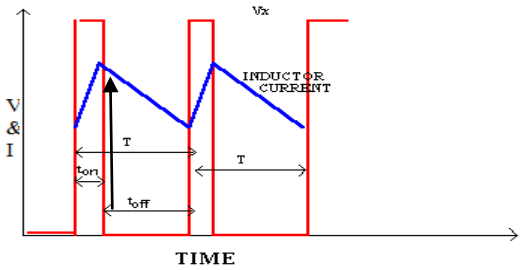

Fig 5: Voltage and current changes

III. THE PROPOSED CONTROL AND POWER MANAGEMENT SYSTEM

The proposed CAPMS is a brought together power the board framework comprising of a supervisory module that screens the required ongoing parameters (dashed lines in Fig. 1) from the PV-battery framework and numerous controllers for every one of the power converters. As per the circumstance of the observed parameters, CAPMS chooses the situations and select explicit control plans to be connected to the converters to guarantee a dependably control condition. In spite of the fact that the proposed CAPMS is structured dependent on the PV-battery framework arrangement appeared in Fig. 1, for different arrangements, for example, frameworks with decentralized inverters or various battery banks, comparable methodology might be appropriate with legitimate alterations. Itemized plans of the CAPMS, considering both gridconnected and islanded modes, are delineated in Fig. 2, which shows the conceivable working situations of the PV-battery microgrid and how CAPMS reacts to control and adjust the framework.

Subsequently, CAPMS knows about the accessible vitality stockpiling that can be utilized in the battery. The upper and lower breaking points of the SoC (SoCupper limit and SoClower limit) are set up to ensure the battery isn't over-charged or released and to expand its cycle life [27]. Contingent upon the PV yield power, SoC and power limit of the battery, DC and AC loads, and the lattice request, CAPMS chooses the activity methods of the PV exhibit (MPPT or power-reference mode) and the battery (charging or release mode) and gives appropriate reference esteems to the controllers, if material. In this manner, control streams in the half breed microgrid are constantly adjusted. The power the board criteria depend on.

$$\text{Grid-connected}: P_{PV} + P_{bat} = P_{DC}^{load} + P_{AC}^{load} + P_{grid}, \quad (1)$$

$$\text{Islanded}: P_{PV} + P_{bat} = P_{DC}^{load} + P_{AC}^{load}, \quad (2)$$

where PPV is the yield intensity of the PV cluster, Pbat is the power streams in the battery converter (Pbat< 0 in charging mode and Pbat> 0 in releasing mode), Pload DC and Pload AC are DC and AC loads, separately, and Pgrid for the most part speaks to the power trading between the primary matrix and the microgrid through the breaker (Pgrid< 0 while getting force and Pgrid> 0 when sending power). Note that the power request.

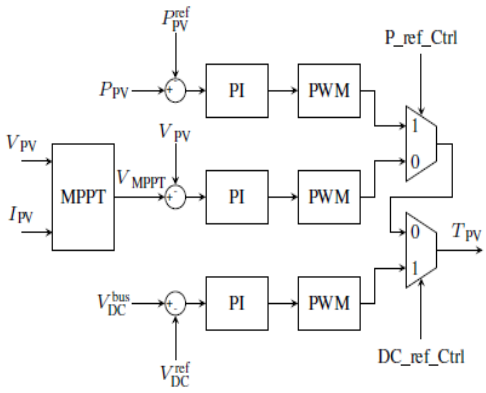

Fig. 6. PV array controller.

from the principle lattice is indicated as Pdemand network which may be acquired by determining information. Before changing from islanded to network associated mode, CAPMS will synchronize the AC voltages at the PCC of the microgrid to pursue the framework side voltages to guarantee a smooth progress With all around adjusted power and managed voltages, CAPMS guarantees a continuous power on both DC and AC transports and enables burdens to connect and play the PV-battery framework, paying little respect to aggravations from exchanging working modes.

IV. CONTROLLER DESIGN OF THE CAPMS

A. PV Array Controller

The PV cluster changes over sun oriented vitality into DC control, and is associated with the DC transport through a lift DC/DC converter. Be that as it may, because of nonlinear attributes of PV boards and the stochastic variances of sun oriented irradiance, there is dependably a most extreme power point (MPP) for each explicit working circumstance of a PV cluster. Along these lines, greatest power point following (MPPT) calculations are commonly actualized in PV framework to remove the most extreme power a PV cluster can give [28]. The proposed CAPMS utilizes a standout amongst the most mainstream techniques, the Incremental Conductance MPPT, which gives a reference voltage V MPPT that the PV cluster will track to create the greatest power under different task conditions (distinctive blends of irradiance and temperature).

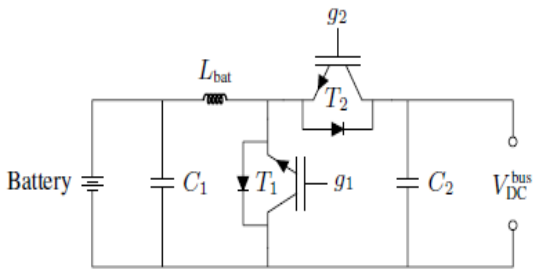

Fig. 7. Bidirectional DC/DC converter for the battery bank.

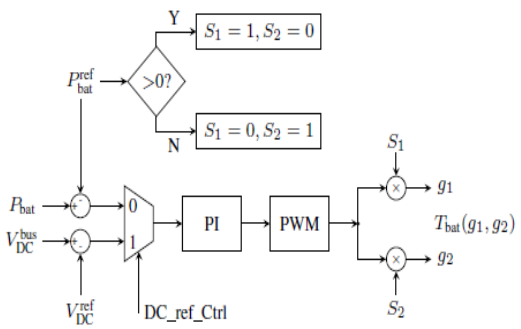

Fig. 8. Battery charging/discharging controller.

For this situation, to adjust the power streams, CAPMS will choose legitimate power references for the PV cluster, Pref PV, as per the estimation of which the working voltage of the PV exhibit, VPV, will move between its VMPPT and the open-circuit voltage, VOC. Since the DC transport voltage is controlled by the battery converter in this circumstance, there will be a steady voltage at the DC transport regardless of the changes in VPV. In MPPT mode (P ref Ctrl = 0 and DC ref Ctrl = 0), continuous PV current, IPV, and V PV are estimated and sent to the MPPT module, which at that point gives V MPPT as the voltage reference for the PV exhibit. Moreover, in islanded mode, when the battery isn't accessible, e.g., because of shortcomings, the PV converter needs to change to control the DC transport voltage to guarantee a steady power supply to the heaps on the DC transport (P ref Ctrl = 0 and DC ref Ctrl = 1). Fig. 6 outlines the controller for these three modes. Note that the circumstance where both P ref Ctrl = 1 and DC ref Ctrl = 1 isn't relevant.

B. Battery Controller

As a vitality cradle, battery bank is important in PV frameworks for power adjusting. The battery bank of this framework is associated with the DC transport and is controlled by a bidirectional DC/DC converter (Fig. 7) which incorporates two switches, T1 and T2, that control the charging/releasing procedure. Fig. 5 clarifies the point by point control process. In matrix associated mode, with the direction DC ref Ctrl = 0, the converter controls the power stream (Pbat) in or out of the battery, where in releasing mode Pbat > 0, and in charging mode Pbat < 0. The last yield of the battery controller is a two-dimensional exchanging signal Tbat(g1; g2). In Islanded mode, the control order DC ref Ctrl is set to "1" by the CAPMS, which changes the converter to work in voltage reference mode. The yield voltage of converter. The CAPMS screens the SoC of the battery and implements its upper and lower limits (SoCupper limit = 90% and SoClower limit = 10% in this investigation) so as to build the existence cycle. Note that the determinations of as far as possible don't influence the execution of the controller.

C. Inverter Controller

A three-stage inverter is utilized to change over DC to AC control, interfacing the DC and AC sides. Like the converters examined over, the control plan of inverter relies upon the working (framework associated or islanded) method of the framework. As is outlined in Fig. 1 and 6, in network associated mode, a phaselocked circle (PLL square) is utilized to remove _, edge the of stage A voltage after the breaker(ea). In islanded mode, _ is produced locally, which is periodical slope flag fluctuating from 0 to 2_ with recurrence f. It is utilized to disintegrate the three-stage AC transport voltages (va; vb and vc) and the inverter yield flows (ia; ib and ic) into d-q outline factors Vd and Vq, and Id and Iq by Park change, separately, for control purposes. Contingent upon the working mode, the controller chooses diverse arrangements of factors to be controlled. Under islanded mode, CAPMS sets the flag "Islanded" to 1, compelling the converter to manage the AC transport voltage Vd and Vq. Recurrence of the AC transport voltages (f) is set to 60 Hz in an openloop way. Prior to shutting the breaker and reconnecting the PV-battery framework to the lattice, the AC transport voltage must be synchronized with the network. Amid islanded mode, the flag "Match up" is set to 0 so that CAPMS has full control of the AC transport voltage by altering the references, V ref d and V ref q . Notwithstanding, to guarantee a smooth progress after changing to gridconnected mode, "Match up" will be set to 1 to synchronize the AC transport and framework side voltages just before shutting the breaker. To this end, _ will be

synchronized to pursue the yield point of PLL, and the AC voltages after the breaker in d-q edge, Ed and Eq, will be picked as the references for Vd and Vq.

V. Simulation Results

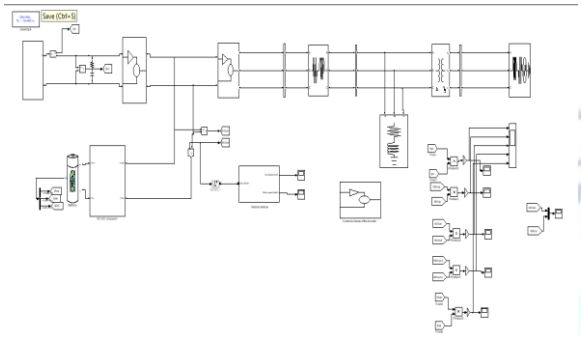

Fig. 9 . Complete Block Diagram Of grid connected Simulation

So as to confirm the execution of the proposed Control And Power the board Scheme, various reenactment of PV-battery framework is developed with the setup displayed in Fig. 9.The battery bank utilizes a general Ni-Cd characteristicmodel whose limit is measured to help 5 days of independence activity (for 150kW burdens) under low irradiance conditions. The proposed Control And Power Management Scheme screens the required factors out of the PV-batterysystem referenced in the above segments, process the datafollowing the plans, as indicated by the circumstance watched, switches the control plots consequently. The contextual analyses test the CAPMS's reactions for numerous situations that the PV-battery framework is working in or exchanging to.Results are investigated exclusively for each situation.

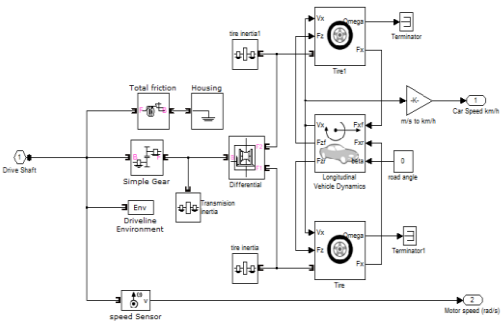

Fig.10.Electric car internal diagram

Electric car

The structure of an electric vehicle is firmly restricted by the measure of vitality brought into the vehicle. electric are worked for eletric vehicle hustling and furthermore for open use. Rundown of models of sunlight based controlled vehicles. Indeed, even the best sun based cells can just gather constrained power and vitality on the outside of the vehicle. This points of confinement sunlight based vehicles to ultralight composite bodies to spare weight. Sunlight based autos don't have the wellbeing and accommodation highlights of regular vehicles. The principal sun powered family vehicle was worked in 2013 by understudies in the Netherlands. [2] This vehicle is equipped for voyaging 550 miles on a solitary charge amid the day. It weighs 850 pounds and has a 1.5 kW sunlight based generator. Sun oriented vehicles must be light and productive. Vehicles with 3,000 pounds or even 2,000 pounds are less pragmatic. Stella's antecedent, Stella Lux, broke a record with a 932-mile length. The Dutch are attempting to popularize this innovation.

Grid Connected Mode

Case A-1

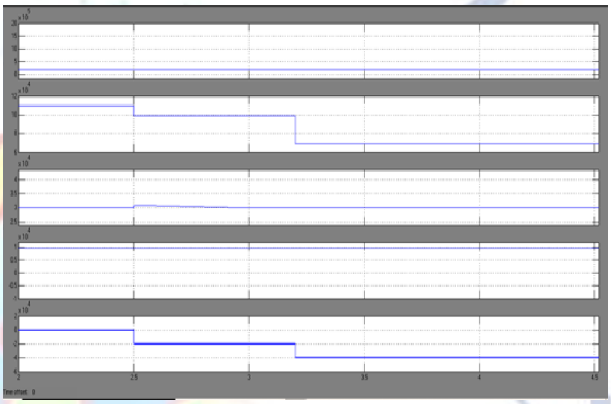

Case A-1: (a) power flows of the PV-battery system

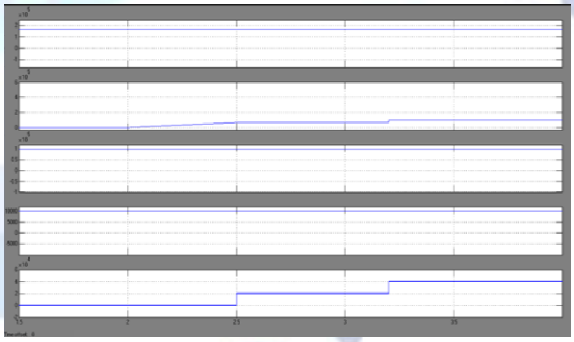

(b) voltage values of the PV-battery system

Case A-2

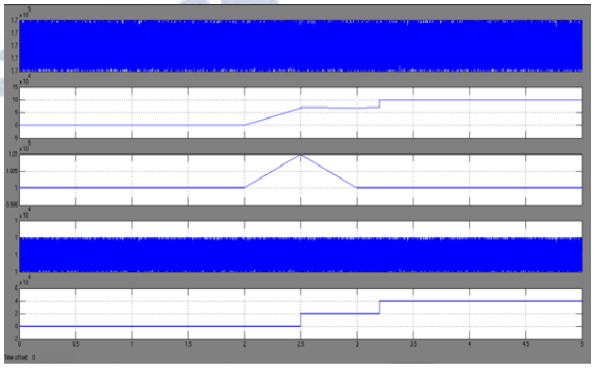

power flows of the PV-battery system.

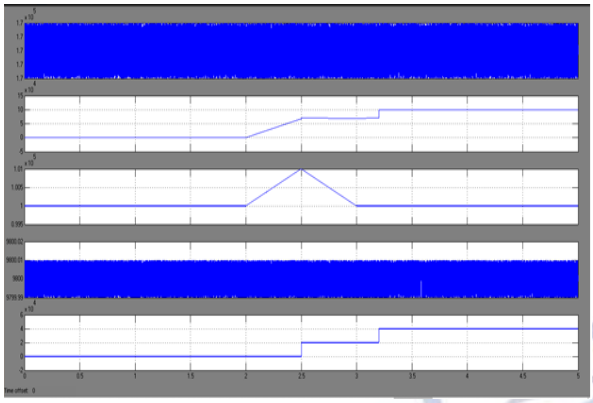

power flows and voltage changes in pv array at Pv-battery system.

Case A-3

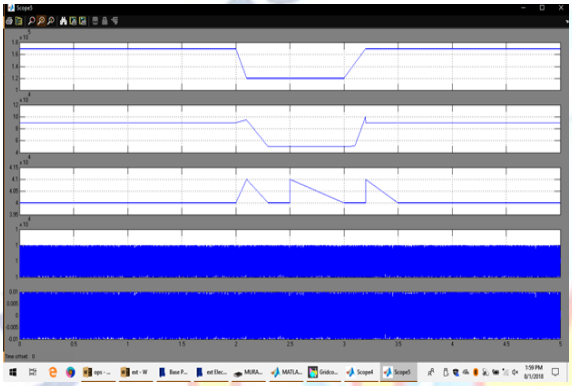

PV array in power-reference mode.

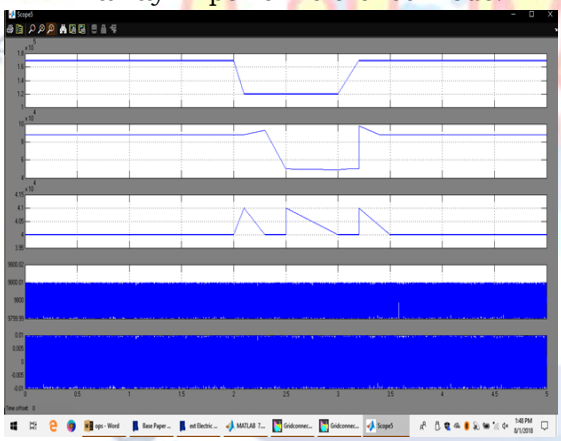

Islanded Mode

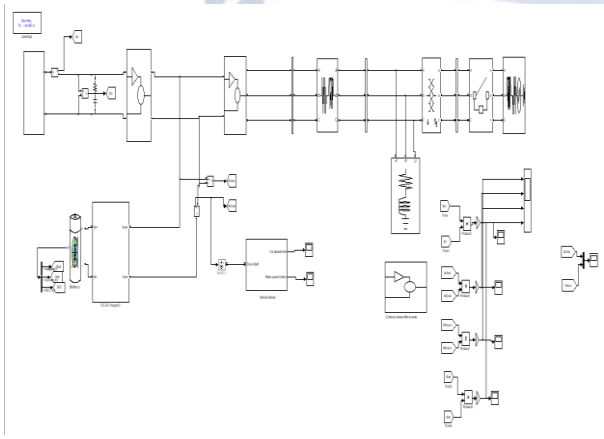

Fig .11.Islanded Mode pv battery based complete diagram

Case B-1

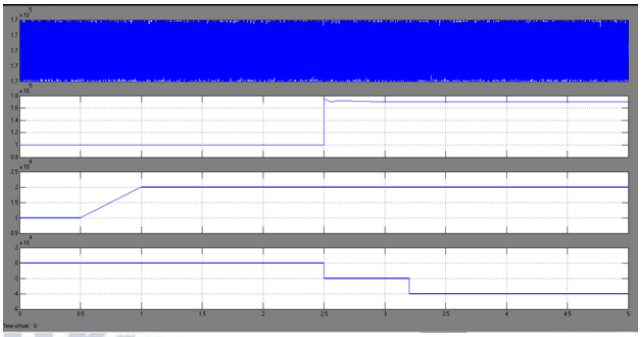

power flows of the PV-battery system with changing loads.

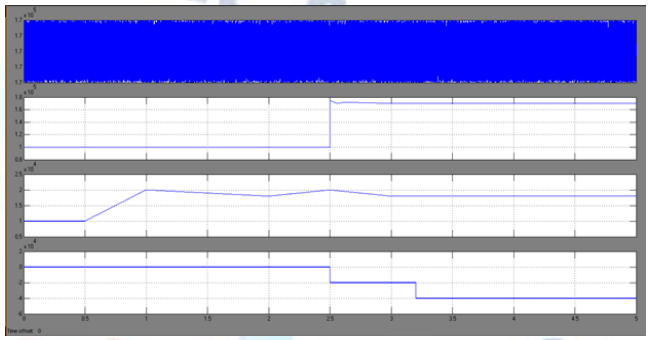

power flows of the PV-battery system dc voltage changing loads.

Case B-2

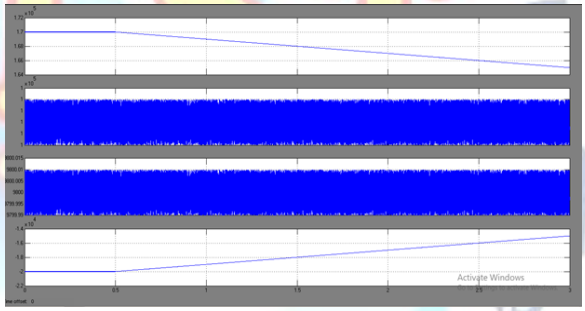

battery power changes with PV generation.

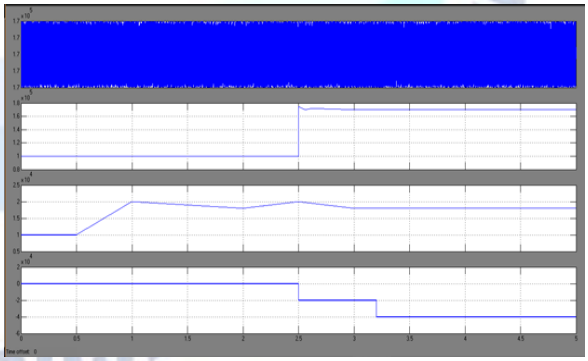

battery power changes Vdc with PV generation

VI. CONCLUSIONS

The nitty gritty systematic investigation of a control and power the executives framework (CAPMS) for half and half PV-battery frameworks with both DC and AC transports and loads, in both lattice associated and islanded modes. The displayed CAPMS can deal with the power streams

in the converters of all units adaptably and adequately, and at last to understand the power balance between the half breed microgrid framework and the matrix. Moreover, CAPMS guarantees a dependable power supply to the framework when PV control vacillates because of insecure irradiance or when the PV exhibit is closed down because of issues. DC and AC transports are under full control by the CAPMS in both network associated and islanded modes, giving a steady voltage condition to electrical loads notwithstanding amid changes between these two modes. This likewise enables extra loads to get to the framework without additional converters, lessening task and control costs. Various reproduction and exploratory contextual investigations are completed in Section IV that checks the agreeable execution of the proposed CAPMS.

References

[1] T. A. Nguyen, X. Qiu, J. D. G. II, M. L. Crow, and A. C. Elmore, "Execution portrayal for photovoltaic-vanadium redox battery microgrid frameworks," IEEE Trans. Continue. Vitality, vol. 5, no. 4, pp. 1379– 1388, Oct 2014.

[2] S. Kolesnik and A. Kuperman, "On the comparability of major variablestep-measure MPPT calculations," IEEE J. Photovolt., vol. 6, no. 2, pp. 590– 594, March 2016.

[3] H. A. Sher, A. F. Murtaza, A. Noman, K. E. Addoweesh, K. Al-Haddad, and M. Chiaberge, "another sensorless half and half MPPT calculation dependent on fragmentary short out current estimation and P&O MPPT," IEEE Trans. Continue. Vitality, vol. 6, no. 4, pp. 1426– 1434, Oct 2015.

[4] Y. Riffonneau, S. Bacha, F. Barruel, and S. Ploix, "Ideal power stream the executives for network associated PV frameworks with batteries," IEEE Trans. Support. Vitality, vol. 2, no. 3, pp. 309– 320, July 2011.

[5] H. Kim, B. Parkhideh, T. D. Bongers, and H. Gao, "Reconfigurable sun oriented converter: A solitary stage control change PV-battery framework," IEEE Trans. Power Electron., vol. 28, no. 8, pp. 3788– 3797, Aug 2013.

[6] Z. Yi and A. H. Etemadi, "A tale recognition calculation for line-toline blames in photovoltaic (PV) clusters dependent on help vector machine (SVM)," in 2016 IEEE Power and Energy Society General Meeting (PESGM), July 2016, pp. 1– 4.

[7] A. Merabet, K. Ahmed, H. Ibrahim, R. Beguenane, and A. Ghias, "Vitality the board and control framework for research facility scale microgrid based breeze PV-battery," IEEE Trans. Support. Vitality, vol. PP, no. 99, pp. 1– 1, 2016.

[8] B. S. Borowy and Z. M. Salameh, "Strategy for ideally estimating the blend of a battery bank and PV exhibit in a breeze/PV half breed framework," IEEE Trans. Vitality Convers., vol. 11, no. 2, pp. 367– 375, Jun 1996.

[9] D. Abbes, A. Martinez, and G. Champenois, "Eco-structure improvement of a self-ruling half breed wind-photovoltaic framework with battery stockpiling," IET Renewable Power Generation, vol. 6, no. 5, pp. 358– 371, Sept 2012.

[10] H. Mahmood, D. Michaelson, and J. Jiang, "A power the executives procedure for PV/battery crossover frameworks in islanded microgrids," IEEE J. Emerg. Sel. Top. Power Electron, vol. 2, no. 4, pp. 870– 882, Dec 2014.