Available online at: http://www.ijmtst.com/vol6issue04.html

International Journal for Modern Trends in Science and Technology

ISSN: 2455-3778 :: Volume: 06, Issue No: 04, April 2020

Web Browser Based Industrial Arm - Axis Control

M Saranya[1] | Dr. M Rajendiran[1]

[1]Department of Computer Science and Engineering, Panimalar Engineering College, Chennai, India.

To Cite this Article

M Saranya and Dr. M Rajendiran, "Web Browser Based Industrial Arm - Axis Control", *International Journal for Modern Trends in Science and Technology*, Vol. 06, Issue 04, April 2020, pp.:86-90.

Article Info

Received on 08-March-2020, Revised on 28-March-2020, Accepted on 31-March-2020, Published on 06-April-2020.

ABSTRACT

Industrial robots are highly challenging in many areas, ranging from spray, welding to shipping, storage, assembly and material processing.More complex and high precision challenging, which leads to higher robots and controllers specifications with new software implementation. As robot controller design can greatly improve performance, robot controller development with new software and communication technology has become an increasing demand, particularly now in India. PLC is the most prevalent controller used in all industries for industrial processing purposes, but its economic factor is too high and maintenance programmers are in enormous demand. Simple devices and cost-effective industrial 6-axis robots are designed to solve economic factors. Simple devices and cost efficient 6-axis industrial robots based controllers are designed to solve economic factors. Using the assistance of Python programming and web development control with Raspberry Pi intervention, the same PLC feature factors are demonstrated. Through ip address the servo control is done in a web browser.

KEYWORDS: *PLC (programmable logic controller), Raspberry PI, PCA9685, servo motor, PWM (Pulse Width Modulation)*

I. INTRODUCTION

Web provides a unique opportunity to control robots to the Internet, enabling various individuals around the globe to control and track automation of the device. This paper is about gathering measurement of the movement of the robot's acquisition parameters. The ways are since the following: Raspberry Pi collects expertise and keeps on information during a database analysis.This method will work primarily on the basis of an algorithm built for carrying the object. Internet users can supervise the robot arm in a use of a web-based user interface to communicate with the experiment instrument any place at any time. This automatic event is predicted on the ATmega platform that will be connected to a microchip mounted on the server robot. The outcome is that the robotic arm is capable of positioning the item correctly at the appropriate location, and the benefit of this robot after training is that it is a solution to many issues such as selecting and positioning hazardous items safely, efficiently and rapidly.

II. ROBOTIC ARM

Robots are joined into work exercises to supplant people, specifically to satisfy the errand being referred to. Mechanical autonomy is part of two territories: modern application autonomy and administration. Nowadays, robots are incorporated into human replacement work tasks, particularly for performing certain tasks. The robotics was divided into two areas: industrial robotics and service robotics. The International Robotics

Federation (IFR) is a service robot that operates semi- or fully autonomously to perform services that are useful to human well-being and equipment, except manufacturing operations. Actually, these mobile robots are used in various applications including hospitals, manufacturing, toxics industry [17], and agriculture.The Robotic arm is primarily used to complete tasks with less time Using PLC[1].SCADA to monitor the operation. The robotic arm used to select objects and position them[4]. The end of the arm was called the end effort.

In Arm control robots, it may be assumed that the manipulator ties form a kinematic chain. It is referred to as the End effectors and is similar to the human side. Based on the function, the end effectors are designed to perform any desired task, industrial welding, rubber gripping, etc.[5]. The Robotic arm has multiple axes. Axis is based on such degrees of freedom as 1DOF(Degree of Freedom)(A1), 2 DOF (A2), 3 DOF (A3), 4 DOF(A4), 5 DOF(A5), 6 DOF(A6)[18][19] refer fig 1. Computer vision [2] and pattern recognition techniques have been used in the past for industrial applications and robot vision.

Eventhough PLC is used for industries most of the small scale industries requires cost effective microcontroller.Robotic Arm using the Microcontroller[7] i.e. ATMEGA8 Microcontroller or PIC (peripheral interface controller) microcontroller using Arduino[8][9] programming. Interfacing is done by using a Raspberry PI board. The remote[13][15] is fitted with potentiometers and the servos are attached to the body.Olden days people try to replace human work with machines. Robots are faster and more effective than people.They do different functions such as packaging, warehouse automatic door control, forging, spinning and painting etc. The elements of robots are developed with inspiration from nature. Manipulators are the arm of the robot that is based on the human arm. The robot had the ability to do the job of objects such as pick and place operations. For the cost effective so many controllers are available like arduino[3], nodeMCU ,Raspberry PI. Raspberry Pi[10][11][12] is like a mini computer used for serial interface with sensors and motors. The advancement of electronic industry arm robotic system industries. The service robotic machine vision ability incorporated[16][17]. In industry 4.0 IOT (Internet of Things) is involved to do specific tasks, which will be operated wireless with the help of Android app, web browser[6].

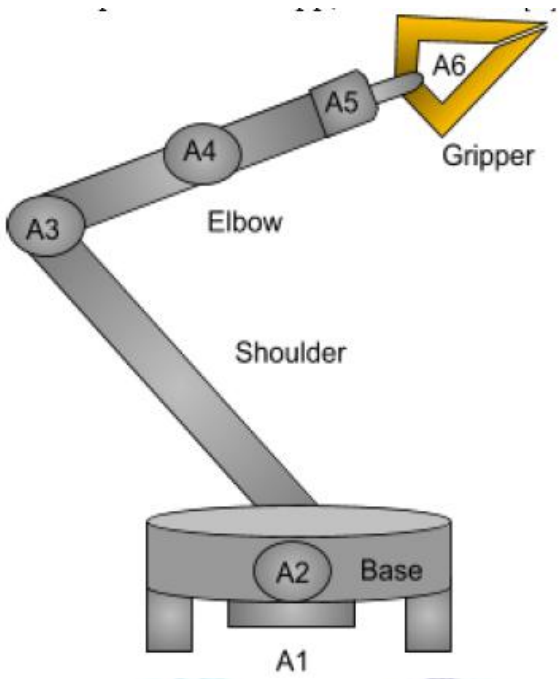

Fig 1: 6 axis arm robot

III. METHODOLOGY

The robotic arm control is based on two types of control : direct kinematics and inverse kinematics. The position of the arm is linked with the kinematic analysis of the value. The performance of robotic arm is manipulator linkage with the importance of the linkage of the design and control. Forward kinematics allows the relationship of the (n x 1) joint vectors to be defined in a specific way.The further increase the amount of dimensions (n), the more complicated kinematic calculation [14]. Thus, the necessary amounts of computation to compute the direction of end-effectors can sometimes become large. Inverse kinematics involves discovering the relationships between the manipulator's connections from the gipper's position in space to solve the reverse transformation equations.

The main methodology used in this project is PWM pulses. A PWM signal consists of two main parts that outline its behaviour, a requirement cycle and a frequency. The duty cycle describes the amount of your time the signal is during a high (on) state as a proportion of the entire time it takes to finish one cycle. By athletics a digital signal off and on at a quick enough rate, and with a particular duty cycle, the output can seem to behave sort of a constant voltage analog signal when providing power to devices. PWM signals are used for a large sort of management applications. Their main use is

for dominant DC motors however it can even be used to manage valves, hydraulics, and alternative mechanical elements. The frequency that the PWM signal has to be set at are keen about the appliance and also the reaction time of the system that's being powered. Below are a few applications and a few typical minimum PWM frequencies required.

IV. SYSTEM BLOCK DIAGRAM

This work has made use of dual-switched electricity supply as a source. Microcontroller and servo motors can be used as power source. Microcontroller is used to produce the pulse from the method of PWM. Servo motors are used as actuators for joints for the robot arm[20][21].

It is the robot system's most important, as it conducts all of the critical kinematic analysis calculations. The controller unit used for this testing is on microcontroller Raspberry Pi 3 and 14 digital output pins (6 used as PWM outputs). The device receives from the web browser refer fig 2. Servomotors are the actuators that are being implemented for the joint operation. The robots are revolutionary manipulator, it implies the joint variables are angle rotations and the servo motors are very suitable.

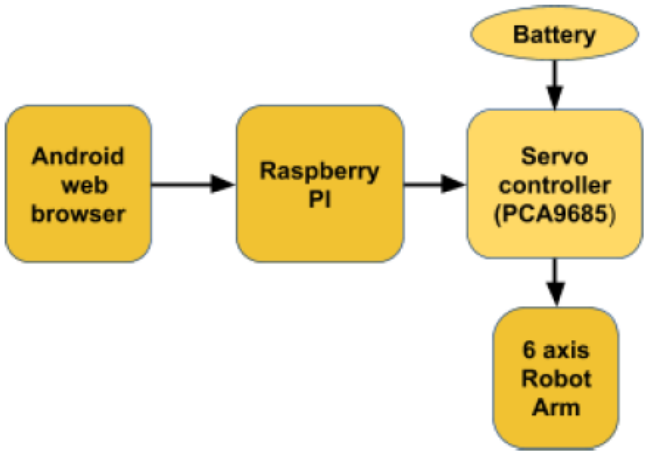

Fig 2 : Block diagram of robotic arm

V. FLOWCHART

This flowchart shows the data control for robotic arm control, it's a closed loop control. Every second the data is checked in a continuous sequence to rearrange the position of the robotic arm.

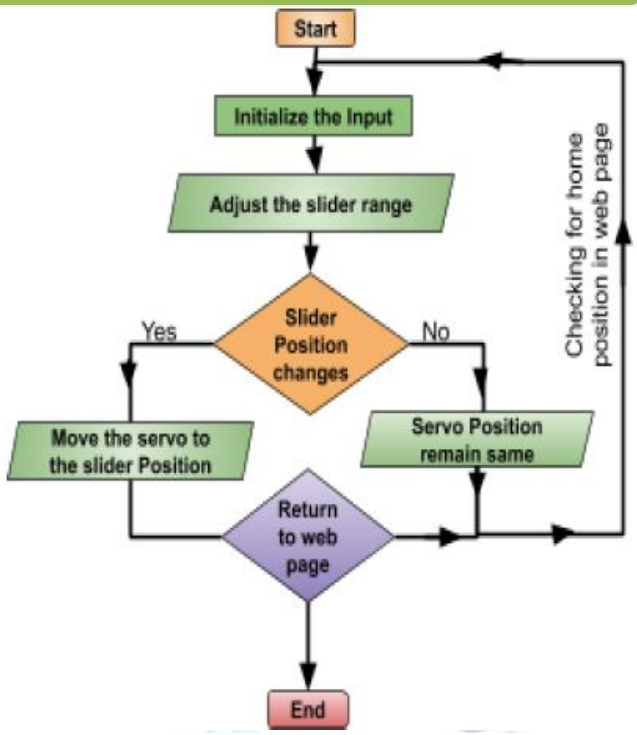

Fig 3: Flow chart of systemic condition of 6 axis arm control robot using web browser

VI. EXPERIMENTAL RESULTS

The mechanical arm control program is written in Python. The web interface is hosted and published directly on the Raspberry Pi by the Flask web server. From the website we can display the position with a browser. With the help of PCA9685 servo drive the flash server helps the GPIO (General Purpose input and output) interface to control the arm refer fig 4, 5, 6.

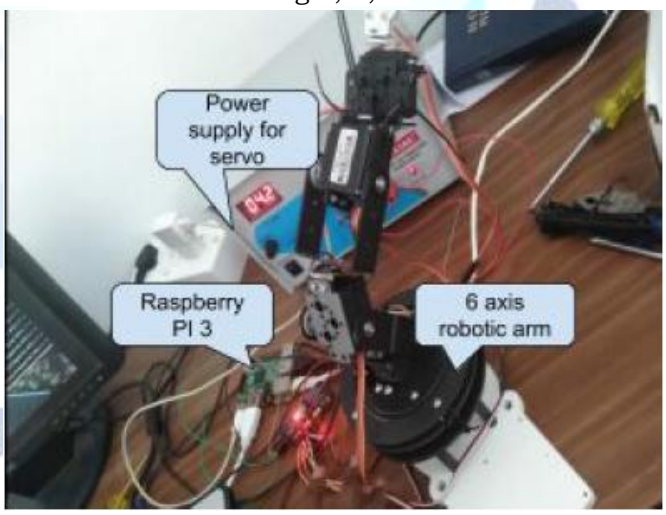

Fig 4: Experimental testing of 6 axis arm control robot

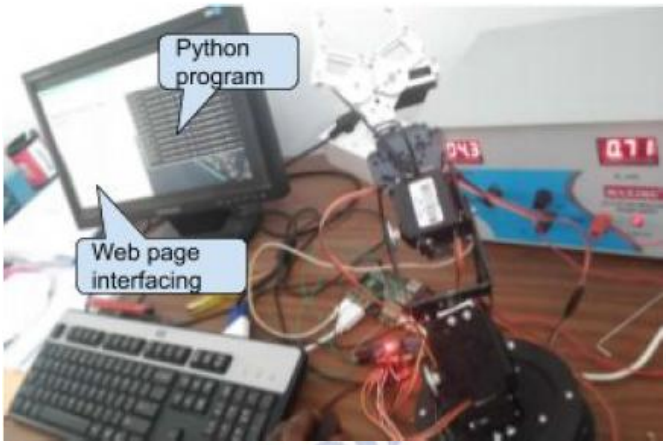

Fig 5: Web-Interfacing of python programming

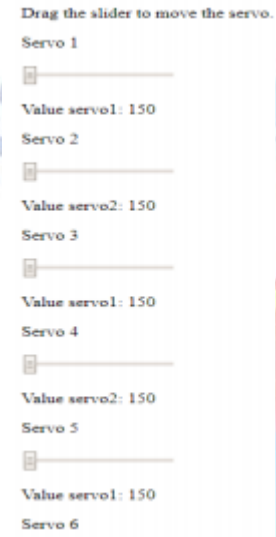

Fig 6 : Web browser control for each axis

VII. CONCLUSION

The Six Degree of Freedom has enabled the robotic arm to perform the designed movements very well.From the above review of various literature survey the Robotics and mechatronics system need more reliable methods to control and also need to develop the simpler network control.From this new innovative idea developed in terms of servo slider in a web page is adjusted with the help of angle,the values are transferred through the server and communicate the servo motor.For change the angle android application and system web browser also used. The experimental testing of the robotic arm is assembled and tested using a web browser. Through the ip address given in the coding as used in various browser devices to login the manipulator to change the servo range to move the servo motor of the arm angle.

In future, the research was carried out for controlling and monitoring of industrial systems in a replacement of the SCADA(Supervisory Control And Data Acquisition) system used for industrial monitoring software. The combination of SCADA with Raspberry Pi ,we can reduce cost effectiveness in the industrial sector.

REFERENCES

[1] Bernard Franklin, Sachin.P, Jagadish.S, Shaista Noor, Rajashekhar C. Biradar(2018) "Pick And Place Humanoid Robot Using Raspberry Pi And Arduino For Industrial Application". International Journal of Advance Research in Science and Engineering.Volume No.07,special Issue No.07.

[2] N. Firthous Begum, P. Vignesh (2015) " Design and Implementation of Pick and Place Robot with Wireless Charging Application " International Journal of Science and Research, Volume 4 Issue 2,

[3] Khin Moe Myint, Zaw Min Min Htun, Hla Myo Tun " Position Control Method For Pick And Place Robot Arm For Object Sorting System" International Journal Of Scientific & Technology Research Volume 5, Issue 06, June 2016

[4] Dr. Bindu A Thomas, Stafford Michahial, Shreeraksha. P, Vijayashri B Nagvi, Suresh M "Industry Based Automatic Robotic Arm" International Journal of Engineering and Innovative Technology (IJEIT)Volume 2, Issue 11, May 2013

[5] Rakesh.N, Pradeep Kumar.A, Ajay.S Design And Manufacturing Of Low Cost Pneumatic Pick And Place Robot.International Journal Of Scientific & Technology Research Volume 2, Issue 8, August 2013

[6] Santosh C, Manoj C S, Akshay Peddarajula, Abhishek R Shetty "Design and Fabrication of Pneumatic Arm for Pick and Place of Cylindrical Objects" Volume V, Issue VI, June 2016-2278-2540

[7] Kaustubh Ghadge, Saurabh More, Pravin Gaikwad "robotic Arm For Pick And Place Application" International Journal of Mechanical Engineering and Technology (IJMET)Volume 9, Issue 1, January 2018

[8] Vighnesh Devgirkar, Akash Sharma, Abhijeet Chavan, Pratik Dhobi, Bhoomika Shukla. "Design and Manufacturing of Pick & Place Robotic Arm" International Journal of Advance Engineering and Research Development Volume 4, Issue 4, April -2017

[9] MRS. M.J.Sawarkar, Trupti.Raut, Nutan P. Nemad, Sonal C. Meshram,Pournima P. Tabhane.Pick and Place Robotic Arm Using Android Device.International Research Journal of Engineering and Technology (IRJET).Volume: 04 Issue: 03 | Mar -2017

[10] Mrs. Arti Utikar, Vinita Yerande,"Material handling system for pick and place using Image processing and PLC"International Research Journal of Engineering and Technology (IRJET),Volume: 05 Issue: 09 | Sep 2018

[11] Kaustubh Gawli, Parinay Karande, Pravin Belose, Tushar Bhadirke, Akansha Bhargava"Internet Of Things (Iot) Based Robotic Arm" International Research Journal of Engineering and Technology (IRJET)Volume: 04 Issue: 03 | Mar -2017

[12] Vishakha Borkar, Prof G.K.Andurkar " Development Of Pick And Place Robot For Industrial Applications" International Research Journal of Engineering and Technology (IRJET)Volume: 04 Issue: 09 | Sep -2017

[13] Saifullah, Khawaja, A., Arsalan, H., Maryam, & Anum. (2010). Keyless car entry through face recognition using FPGA. 2010 International Conference on Future Information Technology and Management Engineering. doi:10.1109/ fitme. 2010.5654862

[14] Kolli, A., Fasih, A., Machot, F. A., & Kyamakya, K. (2011). Non-intrusive car driver's emotion recognition using thermal cameras. Proceedings of the Joint INDS'11 & ISTET'11.doi:10.1109/inds.2011.6024802

[15] Faisal, M., & Thakur, A. (2016). Autonomous car system using facial recognition and geo location services. 2016 6th International Conference - Cloud System and Big Data Engineering (Confluence).doi:10.1109/confluence.2016.7508155

[16] Luo, D., Lu, X., Hu, C., Peng, X., & Wang, W. (2016). A robust traffic driver face detection method. 2016 International Conference on Progress in Informatics and Computing (PIC).doi:10.1109/pic.2016.7949511

[17] Sehgal, V. K., Mehrotra, S., & Marwah, H. (2016). Car security using the Internet of Things. 2016 IEEE 1st International Conference on Power Electronics, Intelligent Control and Energy Systems (ICPEICES).doi:10.1109/icpeices.2016.7853207

[18] E Kiran Mahesh. Jagadale Piyush C(2018). Advanced security system for car2018 3rd International Conference for Convergence in Technology (I2CT)

[19] Afzal, H., & Maheta, V. D. (2014). Low cost smartphone controlled car security system. 2014 IEEE International Conference on Industrial Technology (ICIT).doi:10.1109/icit.2014.6894911

[20] Zhixiong Liu. (n.d.). A New Embedded Car Theft Detection System. Second International Conference on Embedded Software and Systems (ICESS'05). doi:10.1109/icess.2005.6

[21] Porta G., M., Estudillo S. M., J., & A., M. (2006). Bluetooth/GMRS Car Security System with a Randomly Located Movement Detection Device. Electronics, Robotics and Automotive Mechanics Conference (CERMA'06) .doi:10.1109/ cerma.2006.22