Available online at: http://www.ijmtst.com/vol6issue04.html

International Journal for Modern Trends in Science and Technology

ISSN: 2455-3778 :: Volume: 06, Issue No: 04, April 2020

Grid Connected Single Step Bi-Directional Inverter for Battery Energy Storage System

K Rakesh[1] | K Ravi Kishore Reddy[1] | S Vinay[1] | Dr. A V G A Marthanda[1]

[1]Department of Electrical and Electronics Engineering, Laki Reddy Bali Reddy College of Engineering, Mylavaram, India.

To Cite this Article

K Rakesh, K Ravi Kishore Reddy, S Vinay and Dr. A V G A Marthanda, "Grid Connected Single Step Bi-Directional Inverter for Battery Energy Storage System", *International Journal for Modern Trends in Science and Technology*, Vol. 06, Issue 04, April 2020, pp.:73-76.

Article Info

Received on 08-March-2020, Revised on 27-March-2020, Accepted on 29-March-2020, Published on 04-April-2020.

ABSTRACT

The goal of this paper is to intend a grid-connected bidirectinal inverter for battery energy storage system which is built with many numbers of choppers and full-bridge inverter. The advantages of this GSB-inverter are low battery, dc-bus voltages, single-step power conversion, pulsating charging / discharging currents and individual power control of each battery module without any current sensor. Thusly the increase in a lifetime and more flexibility and the interleaved operation and be achieved. The simulation results will be present to make sure the performance of GSB-inverter.

KEYWORDS: *Grid-Tied inverter, battery energy storage system*

I. INTRODUCTION

The greater part of electricity generated is with the assistance of fossil fuel. the {issues} that square measure raising with the usage of fuel like heating and conjointly during this fuel exhaustion. The Renewable energy resources came up to beat of these issues. the most downside of those renewable energy resources is that the resources doesn't accessible within the same content of all the time. Because of this issue, there's a additional likelihood of facing the fluctuations in grid voltage and frequency levels that reflects the potency of the entire system. A grid-tied battery energy storage system came up to beat of these issues. the facility generated by these renewable energy resources doesn't directly transfer to the grid That generated power is hold on in batteries and through these batteries, level parameters and so transferred to the
the DC voltage is born-again to AC grid-grid. The changing method from battery level DC voltage to grid voltage there square measure several conversion processes made-up Some square measure listed below: two-stage configuration, micro-grid configuration, cascaded configuration and at last our projected grid-tied single step bidirectional inverter. The schematic diagram of the workflow is clearly shown in the below block diagram.

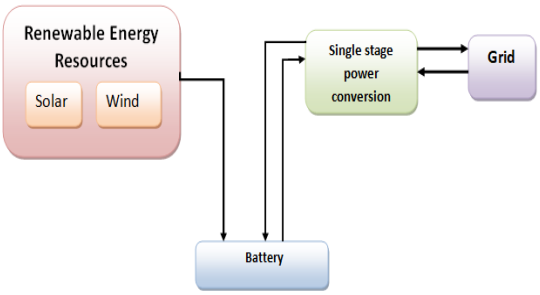

Fig.1 Blockdiagram of the proposed system from Renewable energy resources to Grid

From the above diagram, it's clearly shown that the ability generated by the renewable energy resources is transferred to batteries get charged, those charged batteries get discharged at that instant low-level DC voltage is boosted to grid-level voltage within the single-step power conversion which regenerate power is transferred o grid. The circuit diagram is of the intended GSB-inverter is shown below within the fig.2, the 3 battery modules area unit connected in parallel and every one is connected with the DC-DC converters essentially known as Buck-Boost converters. These BBCs converts the low-level dc voltage to high-level dc voltage and any born-again to AC voltage by using the inverter (DC-AC).

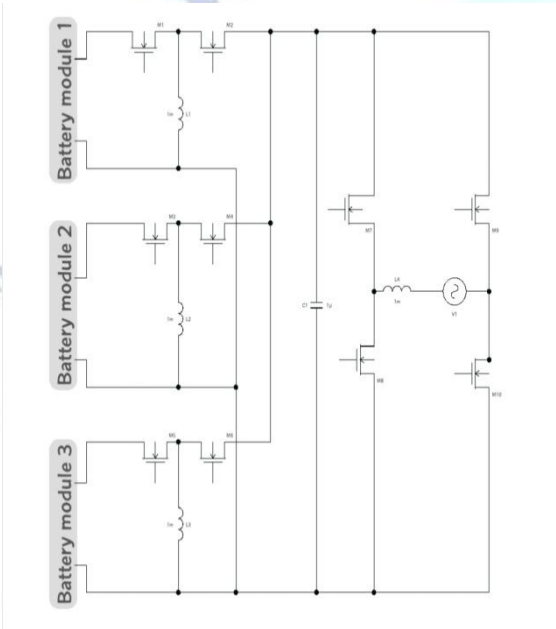

Fig.2 Shows the proposed GSB-inverter with three battery modules.

II. Operation

A. *Discharging mode:*

The operation of the planned GSB-inverter is initially the switch M1 is in ON state and switch M2 is in OFF state in order that the inductance L1 is in parallel to the battery and therefore the inductance gets charged and for next phase, the switch M2 is in ON state and switch M1 is in OFF state. The inductance is in parallel to the inverter and capacitor C1. The induced voltage within the inductance gets discharged and appears across the capacitor in so the DC voltage is regenerate into AC voltage. The capacitor is for filtration functions. And for the frequently switch on and OFF states is done by the gate pulses that is generated by victimisation the SPWM pulses.

The SPWM pulses area unit generated by comparison the sinusoidal pulses and sawtooth wave and passes the wave provided that the sawtooth wave is less than the sinewave. The switches M1 and M2 changing its state vice-versa.

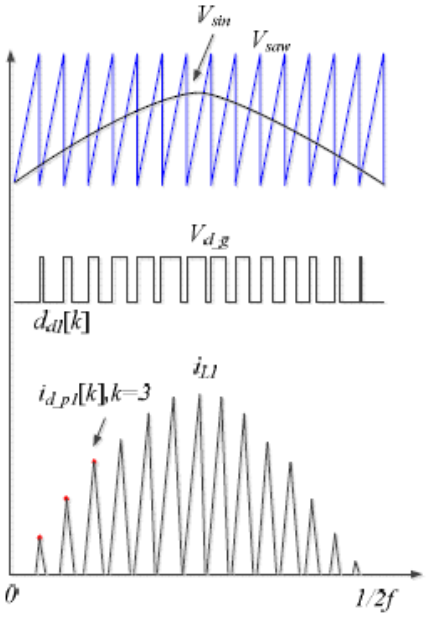

Fig.3 Control signal generation of switches M1 and M2 in discharging mode.

B. *Charging mode:*

For battery charging operation within the initial BBC set the switch M1 is usually turned OFF and M2 is in ON state the at this instant the input inductor L1 potential is equal to the capacitance C1 that maintains the voltage level of the Grid. And inductor gets charged and for next cycle, the inductor starts Discharging through the battery once the switch M1 is in ON state and switch M2 is in OFF state as we describe earlier the switches M1 and M2 changes their states in vice-versa. The control signal generation for switches M1 and M2 is shown in fig.4: In charging and discharging operation the inverter circuit is operated equally that's by victimisation the normal pulses width modulation ar switches in the inverter are controlled. The switches of T1 and T3 are triggered at the time so that in the positive part of a wave is passed through the following path switch T1, M2, inductor L1, and T3 forms closed path. and for a negative innovate wave is felt the subsequent path switch T2, M2, inductor L1, and T4 forms closed path.

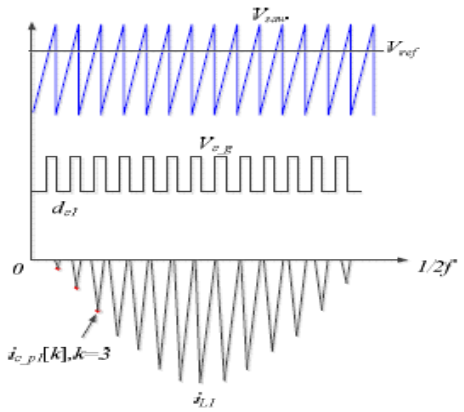

Fig.4 Control signal generation of switches M1 and M2 in charging mode.

Finally , the AC voltage is in grid in rectified to DC voltage and charges battery.

The Advantages of the projected GSB-inverter:

- power conversion done in single step.
- Work with low battery modules.
- DC-bus voltages,
- Pulsating charging/discharging currents
- Individual power control for every battery module.

Therefore, the leveling, additional lifetime of battery, and adaptability of the battery energy storage system are often accomplish.

Based on the simulation the component parameters are :

1) Input inductance L1 = L2 = 180µH.
2) Battery module nominal voltage = 48 V
3) Grid voltage = 230 Vrms/50Hz.
4) switching frequency fs = 20 kHz.
5) capacitance C1 = 2 µF
6) Output inductance L = 1.5 mH the maximum duty ratio in battery discharging mode will be nearer to : 0.757 1 < D .

the duty ratio in battery charging mode may be nearer: 0.243 1 < D .

III. SIMMULATION RESULTS

Simulink diagram of GSB-Inverter

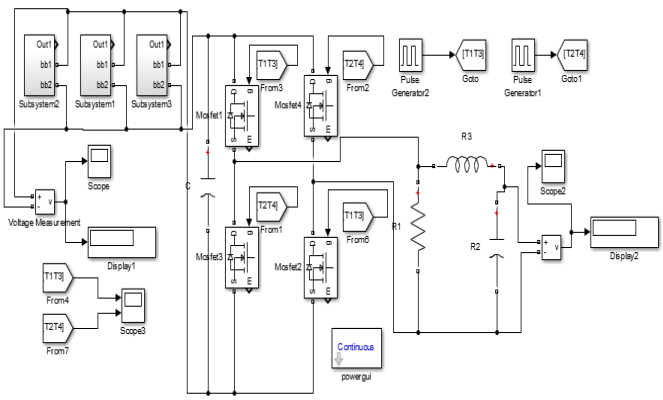

Fig .5 Power flow from 48V DC(Battery) to 230 V AC(Grid).

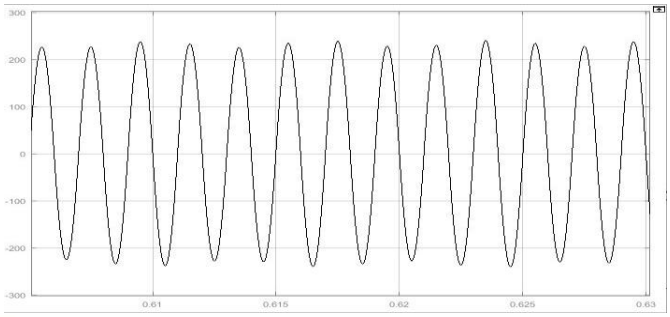

Fig 6 simulation result of Inverter for i.e: 230V AC connected to grid.

In Buck Boost converter, the output voltage of is negative because the at the time of discharging the inductor polarities are reversed

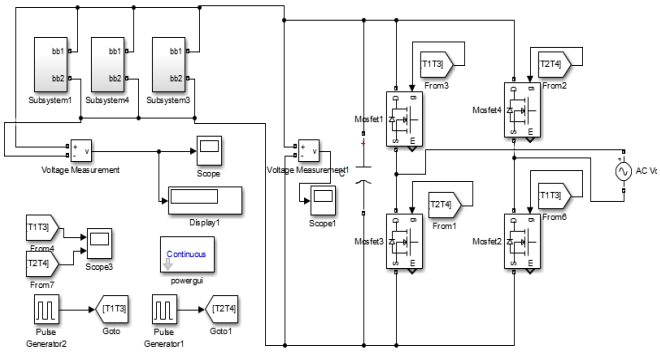

Fig.7 Shows the power flow from the 230V AC to 48V DC and charges Battery

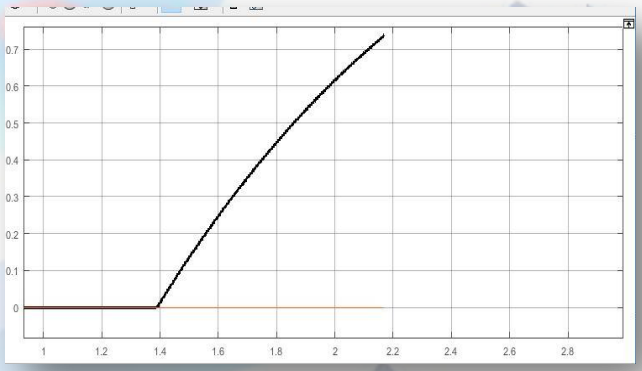

Fig.8 Shows the battery is charging

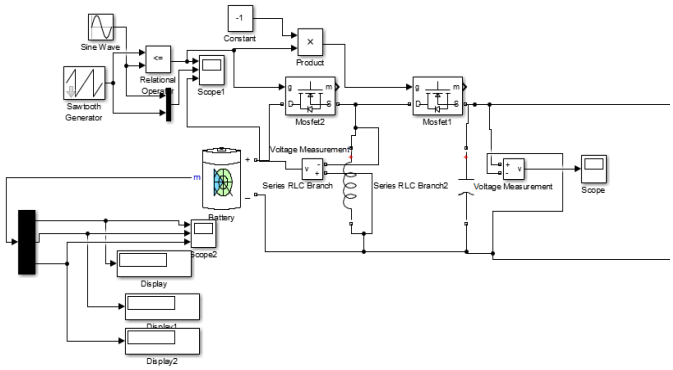

Fig. 9 Simulink diagram of BUCK BOOST COVERTER

Fig. 10 Simulation result of Buck-Boost converter.

IV. Conclusion

A novel grid-tied single step bi-directional connected inverter, which is built with many numbers of BBCs and full-bridge inverter is proposed. The GSB-inverter every battery module can be controlled independently. So that the system maintenance can be made easily and battery life time increased. Without the need of current sensor the power capacity can be controlled and the interleaved operation is done. Finally, the simulation results are presented to verify the GSB-inverter performance.

References

[1] Bi-directional single stage grid connected inverter for battery energy storage system. Kuo-Yuan Lo, Yaow-Ming Chen, *Senior Member*, *IEEE*, and Yung-Ruei Chang, *Member*, *IEEE*

[2] "Active buck-boost inverter," IEEE Trans. Ind. Electron., vol. 61, no. 9, pp. 46914697 Sep. 2014.

[3] R Sai Chandan, T L Sai Kiran, G Swapna, T Vijay Muni. "Intelligent Control Strategy for Energy Management System with FC/Battery/SC", JCR. 2020; 7(2): 344-348. doi:10.31838/jcr.07.02.66

[4] Mounika Muppavarapu, G G Rajasekhar, T Vijay Muni, R B R Prakash. ENHANCEMENT OF POWER QUALITY IN A GRID CONNECTED UDE BASED PV INVERTER. JCR. 2020; 7(2): 340-343. doi:10.31838/jcr.07.02.65

[5] Muni, T. V., & Lalitha, S. V. N. L. (2019). Power management strategy in solar pv system with battery protection scheme in dc microgrid. *International Journal of Innovative Technology and Exploring Engineering*, *8*(6), 960–964.

[6] Vijay Muni, T., & Lalitha, S. V. N. L. (2019). Fast acting mppt controller for solar pv with energy management for dc microgrid. *International Journal of Engineering and Advanced Technology*, *8*(5), 1539–1544.

[7] Vijay Muni, T., Satya Pranav, A., & Amara Srinivas, A. (2020). IoT based smart battery station using wireless power transfer technology. *International Journal of Scientific and Technology Research*, *9*(1), 2876–2881.

[8] Muni, T.V. and Varma, P.S. and Priya, S.K. and Bhavya, J. and Rajasekhar, S., "Energy management in a DC microgrid with energy storage system", *Journal of Advanced Research in Dynamical and Control Systems*, 2020, 12(2), 130-136, 10.5373/JARDCS/V12I2/S202010015