Available online at: http://www.ijmtst.com/vol6issue03.html

International Journal for Modern Trends in Science and Technology

ISSN: 2455-3778 :: Volume: 06, Issue No: 03, March 2020

Power Quality Improvement using Artificial Neural Networks Controlled Dynamic Voltage Restorer

Y Surya Naveen[1] | V Anil Kumar[1] | B Sudheer[1] | K Saritha[2]

[1]UG Students, Department of Electrical and Electronics Engineering, Godavari Institute of Engineering and Technology (A), Rajahmundry, Andhra Pradesh, India.

[2]Assistant Professor, Department of Electrical and Electronics Engineering, Godavari Institute of Engineering and Technology (A), Rajahmundry, Andhra Pradesh, India.

To Cite this Article

Y Surya Naveen, V Anil Kumar, B Sudheer and K Saritha, "Power Quality Improvement using Artificial Neural Networks Controlled Dynamic Voltage Restorer", *International Journal for Modern Trends in Science and Technology*, Vol. 06, Issue 03, March 2020, pp.:213-220.

Article Info

Received on 26-February-2020, Revised on 05-March-2020, Accepted on 11-March-2020, Published on 23-March-2020.

ABSTRACT

One of the significant worries in power industry today is power quality. It turns out to be particularly significant with the presentation of cutting edge and entangled gadgets, whose exhibition is delicate to the nature of intensity supply. The electronic gadgets are touchy to unsettling influences and in this way mechanical burdens become less tolerant to control quality issues, for example, voltage plunges, voltage hangs, voltage flashes, music and burden unbalance and so on. At present, a wide scope of entirely adaptable controllers, which profit by recently accessible force hardware segments, are developing for custom force applications. Among these, D-STATCOM, dynamic voltage restorer (DVR) and brought together force quality conditioner (UPQC) which depends on the VSC rule are utilized for power quality improvement. The primary point of my paper is to plan DVR which is utilized to remunerate voltage quality issues and Fuzzy Logic Controller and Artificial Neural Network (ANN) is utilized to control the inverter. The outcomes are contrasted and ordinary controller. The outcomes will be examined utilizing matlab/simulink programming.

KEYWORDS: *Dynamic Voltage Restorer, Artificial Neural Network, Fuzzy Logic Controller, PI Controller, Fuzzy Inference System, Rule View, Surface View*

Copyright © 2014-2020 International Journal for Modern Trends in Science and Technology
All rights reserved.

I. INTRODUCTION

Power quality issues in the circulation frameworks are interference, voltage droop and voltage swell because of the expanded utilization of delicate and basic gear's in the framework. A few models are gear's of correspondence framework, process enterprises, exact assembling forms and so on. Force quality issues, for example, homeless people, droops, swells and different twists to the sinusoidal waveform of the stock voltage influence the presentation of these equipment's. A DVR is utilized to remunerate the inventory voltage unsettling influences, for example, droop and swell. The DVR is associated between the stock and touchy burdens, with the goal that it can infuse a voltage of required extent and recurrence in the conveyance feeder. The DVR is worked with the end goal that the heap voltage extent is controlled to a consistent size, while the normal genuine force

retained/provided by it is zero in the relentless state. The capacitor upheld DVR is broadly tended to in the writing [8-11]. The instantaneous reactive power theory (IRPT) [6], sliding mode controller [9], instantaneous symmetrical components [2] etc., are discussed in the literature for the control of DVR.

In this project a new control calculation is proposed dependent on the present mode control and relative essential (PI) controllers for the control of DVR. The broad reenactment is performed to exhibit its ability, utilizing the MATLAB with its Simulink and Power System Blockset (PSB) tool compartments.

II. Power Quality

2.1 Introduction

Power quality is the mix of voltage quality and current quality. Along these lines power quality is worried about deviations of voltage as well as present from the perfect. Force circulation frameworks, preferably, ought to furnish their clients with a uninterrupted flow of vitality at smooth sinusoidal voltage at the contracted greatness level and frequency However, by and by, power frameworks, particularly the appropriation frameworks have various nonlinear burdens, which fundamentally influence the nature of intensity supplies. Because of the nonlinear loads, the immaculateness of the waveform of provisions is lost. This wind up creating numerous Power quality issues.

While power unsettling influences happen on every electrical framework, the affectability of the present advanced electronic gadgets makes them increasingly helpless to the nature of intensity supply. For some touchy gadgets, a fleeting aggravation can cause mixed information, interfered with interchanges, a solidified mouse, framework accidents and hardware disappointment and so on. A force voltage spike can harm significant segments. Force Quality issues envelop a wide scope of unsettling influences, for example, voltage hangs/swells, glimmer, sounds mutilation, motivation transient, and interferences.

2.2 Power Quality Problems

- Voltage dip
- Voltage sag
- Voltage swell
- Voltage 'spikes', 'impulses' or 'surges'
- Voltage transients
- Harmonics
- Flickers

III. Dynamic Voltage Restorer

3.1 Introduction

Among the force quality issues (droops, swells, sounds…) voltage lists are the mostsevere unsettling influences. So as to defeat these issues the idea of custom force gadgets isintroduced as of late. One of those gadgets is the Dynamic Voltage Restorer (DVR), which is themost productive and viable present day custom force gadget utilized in power dispersion networks.DVR is an as of late proposed arrangement associated strong state gadget that infuses voltage into the system so as to manage the heap side voltage.

It is regularly introduced in a dispersion systembetween the stockpile and the basic burden feeder at the point of common coupling (PCC). Otherthan voltage hangs and swells remuneration, DVR can likewise included different highlights like: line voltage music pay, decrease of homeless people in voltage and issue current impediments.

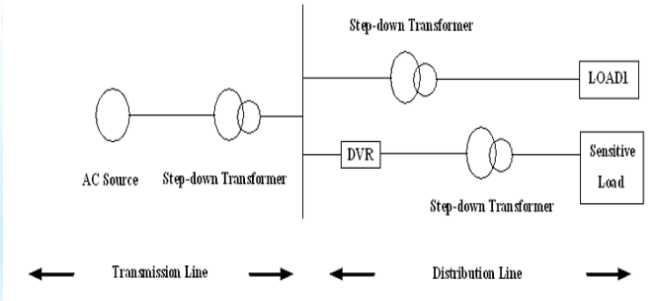

3.1 Location of DVR

3.2 Basic Configuration of DVR

The general configuration of the DVR consists of:

- An Injection/ Booster transformer.
- A Harmonic filter.
- A Voltage Source Converter (VSC).
- DC charging circuit.
- A Control and Protection system.

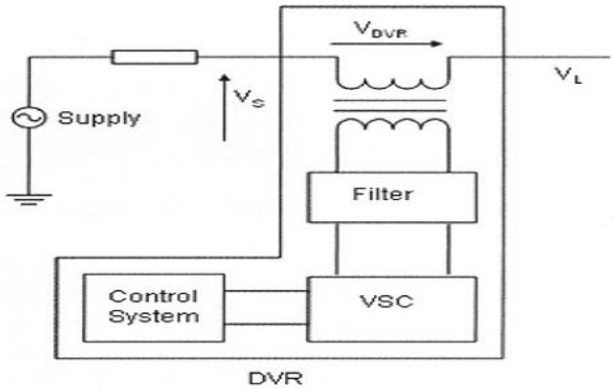

Fig 3.2 Schematic Diagram of DVR

IV. DVR Control Strategy

4.1 DVR Control Strategy

The proposed algorithm is based on the estimation ofreference supply currents. It is similar to the algorithm forthe control of a shunt compensator like DSTATCOM for the terminal voltage regulation of linear and nonlinearloads [6]. The proposed control algorithm for the control of DVR is depicted in Fig 5.1.

From the below figure the it is clear that the a-b-c variables are converted into d-q-0 by the park's transformation method. This transformation is used in the extensively used in the three-phase circuits.In the calculation of three phase synchronous machines this transformation can be used to transfers the three-phase stator quantities and three-phase rotor quantities to a single reference frame quantities in order to avoid the time varying inductances effects.This transformation is proposed by park's.This direct-quadrature-zero transfoamtion is similar to the alpha-beta-gaama transformation.

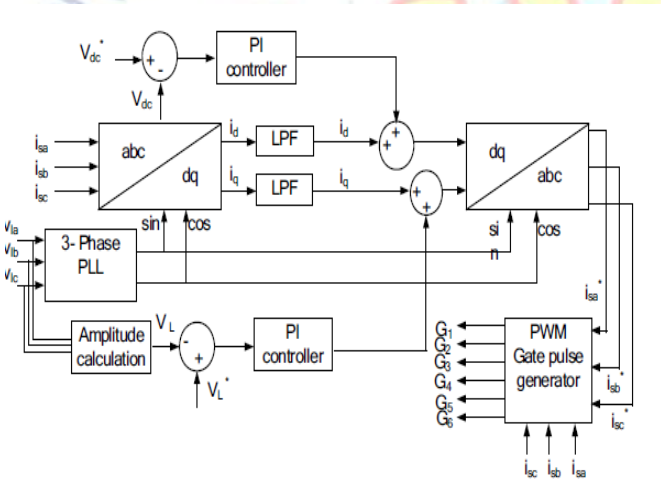

Fig 4.1 Control scheme of the DVR

The arrangement compensator known as DVR is utilized to infuse a voltage in arrangement with the terminal voltage. The hang and swell in terminal voltages are repaid by controlling the DVR and the proposed calculation characteristically gives a self-supporting dc transport to the DVR. Three-stage reference supply currents (isa*, isb*,isc*) are inferred utilizing the detected load voltages (vla, vlb, vlc), terminal voltages (vta, vtb, vtc) and dc bus voltage (vdc) of the DVR as input signals. The synchronous reference outline hypothesis based method is used to acquire the immediate pivot (id) and quadrature hub (iq)components of the heap current. The heap flows in the three-stages are changed over into the d-q-0 edge utilizing the Park's transformation as,

$$\begin{bmatrix} i_d \\ i_q \\ i_0 \end{bmatrix} = \frac{2}{3}\begin{bmatrix} \cos\theta & -\sin\theta & \frac{1}{2} \\ \cos\left(\theta-\frac{2\pi}{3}\right) & -\sin\left(\theta-\frac{2\pi}{3}\right) & \frac{1}{2} \\ \cos\left(\theta+\frac{2\pi}{3}\right) & \sin\left(\theta+\frac{2\pi}{3}\right) & \frac{1}{2} \end{bmatrix}\begin{bmatrix} i_{la} \\ i_{lb} \\ i_{lc} \end{bmatrix}$$

V. Fuzzy and ANN Controller

5.1 Introduction

The fundamental utilization of Fuzzy control framework depends on observational principles is progressively successful. Fuzzy frameworks are effectively redesigned by including new standards or new highlights to improve execution. Fuzzy control can be utilized to improve existing conventional control frameworks by adding a layer of insight to the present control technique [7].

The Fuzzy logic controller comprises of Fuzzy Inference System Editor. The reenactment of delicate exchanging circuit is created in this FIS editorial manager. VCr and ICr are the contributions of the fluffy controller. The yield of the controller is fresh worth. This Graphical User Interface comprises of FIS Editor, Membership work Editor, Rule Editor, Rule Viewer and Surface Viewer.

5.2 Fuzzy Inference Diagram

The fuzzy derivation outline is the composite of all the littler graphs we've been taking a gander at so far in this area. It at the same time shows all pieces of the fuzzy induction process we've inspected. Data courses through the fuzzy surmising outline. fuzzy surmising is the way toward planning the mapping from an offered contribution to a yield utilizing fuzzy rationale. The mapping at that point gives a premise from which choices can be made, or designs recognized. The procedure of fuzzy induction includes the entirety of the pieces that are depicted in the past segments: enrollment capacities, fuzzy rationale administrators, and in the event that rules.

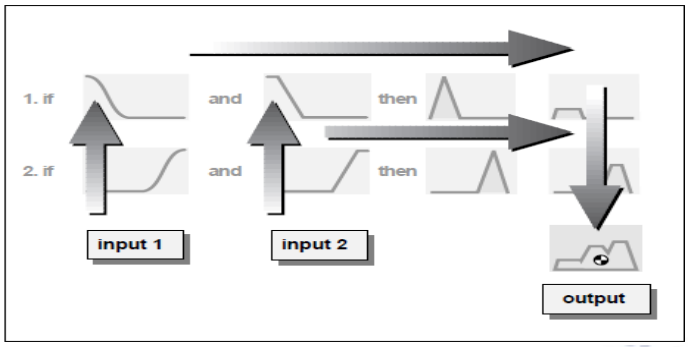

Fig.5.1: Fuzzy Inference Diagram

Fuzzy derivation frameworks have been effectively applied in fields, for example, programmed control, information grouping, choice investigation, master frameworks, and PC vision. In light of its multidisciplinary nature, Fuzzy deduction frameworks are related with various names, for example, Fuzzy standard based frameworks, Fuzzy master frameworks, Fuzzy demonstrating, Fuzzy acquainted memory, fuzzy rationale controllers, and just (and ambiguously) Fuzzy frameworks.

5.3 Artificial Neural Networks

The fundamental processing element of a neural network is neurons. This building block of human awareness encompasses a few general capabilities. Basically, biological neurons receive inputs from other sources, combine them in some way, perform a generally nonlinear operation on the result, and then output the final result. Figure 7.1 shows the relationship of these four parts. Within humans there are many variations on this basic type of neurons, further complicating man's attempts at electrically replicating the process of thinking. Yet, all natural neurons have the same four basic Components

These components are known by their biological names – dendrites, soma, axon, and synapses. Dendrites are hair-like extensions of the soma which act like input channels. These input channels receive their input through the synapses of other neurons. The soma then processes these incoming signals over time. The soma then turns that processed value into an output which is sent out to other neurons through the axon and the synapses.

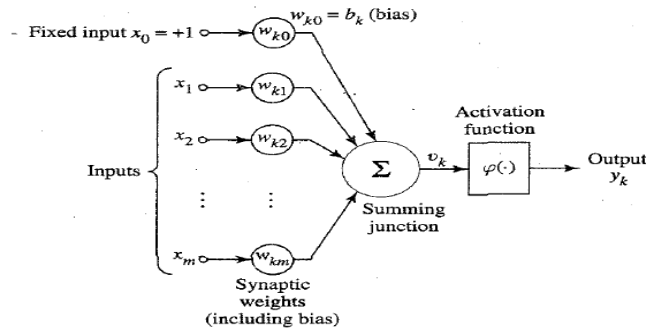

Fig 5.2. Artificial Neural Networks

VI. Simulation Results

6.1 Base System

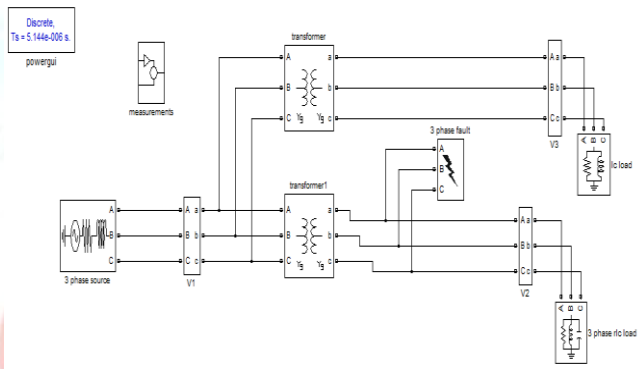

Fig 6.1 Base System

This is the square outline indicating source, burden and transmission line in broken conditions. The deficiency can be of any nature like L-G, L-L-G, L-L or 3-PHASE FAULT. In these conditions serious deficiency flows course through the lines and there is a drastic drop in line and load voltages.

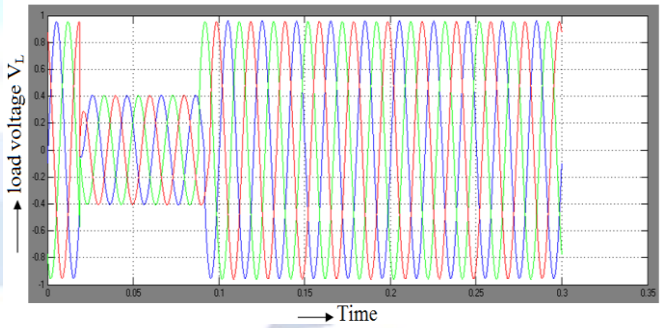

Fig 6.2 Load Voltage

The drop in the load voltage can be seen in above wave form due to fault in transmission line.

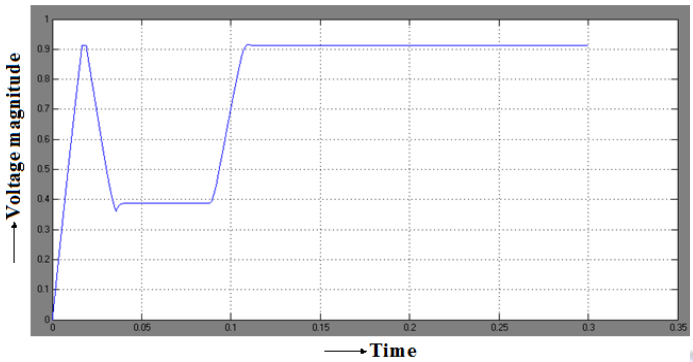

Fig 6.3 Voltage Sag

The sag in the voltage waveform which can be clearly observed in the above figure which is deviating from the actual voltage curve.

6.2 Base System With PI Controller

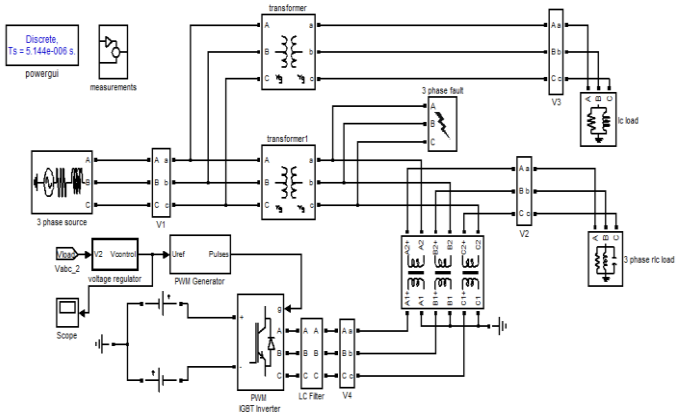

Fig 6.4 Base System With PI Controller

This is the square chart indicating source ,burden and transmission line in flawed conditions . The sort and force of flaw can be distinguished and remedied with the DVR and its control system . What's more, bring back the voltage levels to the ordinary working an incentive before the event of shortcoming.

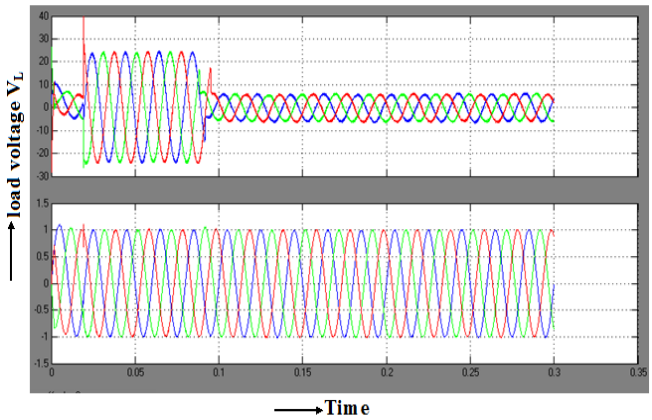

Fig 6.5 injected voltage by the DVR

In the above figure the principal waveform infers the infused voltage by the DVR into the lines to remunerate the voltage drop, this voltage drop is referred as a voltage sag.The subsequent waveform suggests the repaid load voltage at the buyer side

.

6.3 Base System With Fuzzy Controller

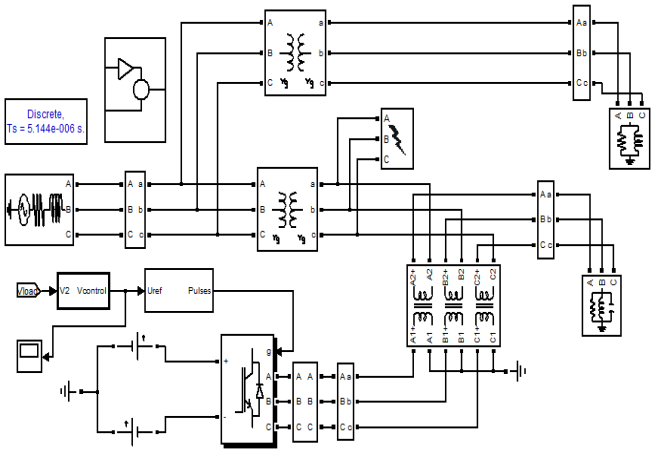

Fig 6.6 Base System With Fuzzy Controller

This is the square chart indicating source, burden and transmission line in broken conditions. The sort and power of flaw can be distinguished and rectified with the DVR and its control instrument. What's more, bring back the voltage levels to the typical working an incentive before the event of issue.

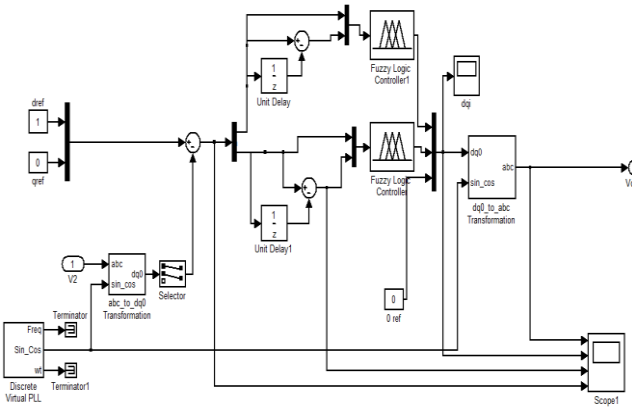

Fig 6.7 Subsystem of Fuzzy Controller

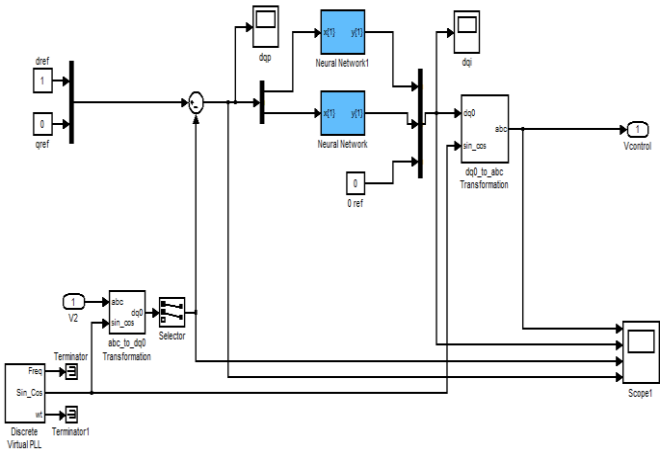

Fig 6.8 control circuit using Artificial Neural Network

The controller utilized in the above reproduction hardware is fluffy controller .Since

fluffy being a propelled controller there is no need of tuning the controller, thus fluffy controller is liked to ordinary controllers.

6.4 Design and Simulation of Fuzzy Controller

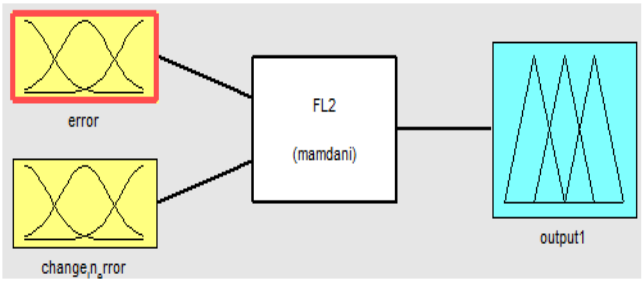

FIS editor

Fig 6.9 FIS Editor

FIS editor is used for giving the number of input and output variables for the fuzzy controller.

FAM table

E / DE	N	Z	PS	PFS	PA	PFB	PB	PVB
N	N	Z	PS1	PFS1	PA1	PFB1	PB1	PVB
P	N	Z	PS2	PFS2	PA2	PFB2	PB2	PVB

The input and output variables are plotted in the form of membership functions with the help of FAM table only. FAM table is a collection of statistical data regarding the system used in simulation.

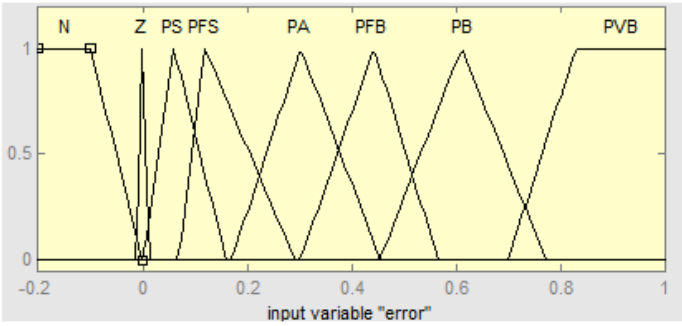

Membership function of error input

Fig 6.10MF of error

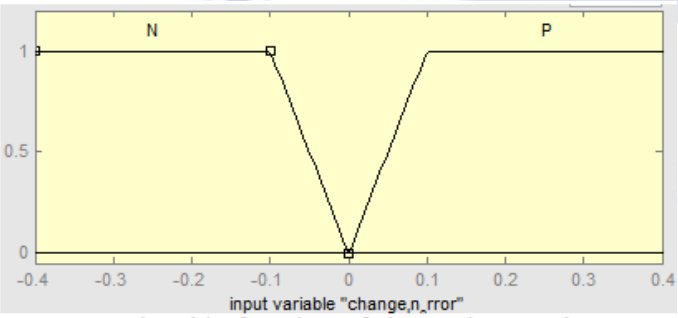

Membership function of change in error input

Fig 6.11 MF of change in error

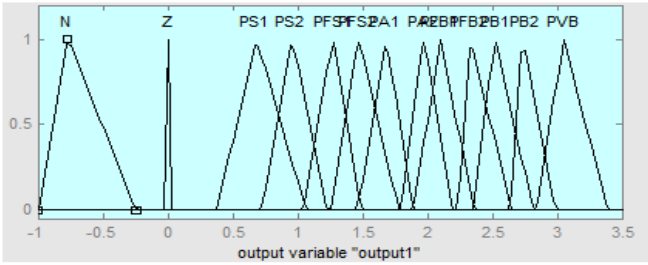

Membership function of output variable

Fig 6.12 MF of output

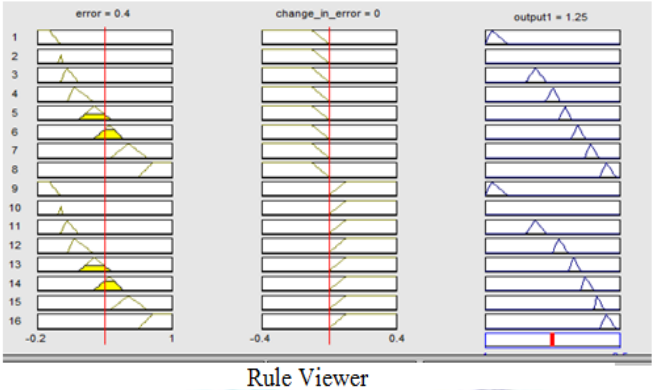

Rule Viewer

Fig 6.13 Rule viewer

Rule viewer is fundamentally a window in fuzzy controller recreation to discover the ideal arrangement in the yield looking at different info blends as appeared previously.

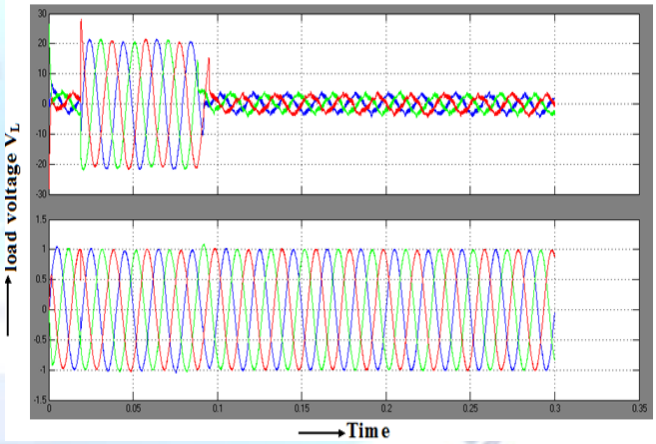

Fig 6.14 injected voltage by the DVR fuzzy

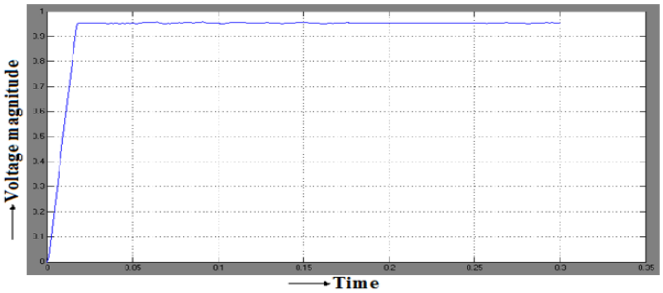

Fig 6.15 voltage sag with fuzzy

With the use of fuzzy controller in the control hardware of DVR we can take out the voltage drop in the lines and purchaser side giving a steady voltage at the heap end. This can be closed by watching the above voltage charts.

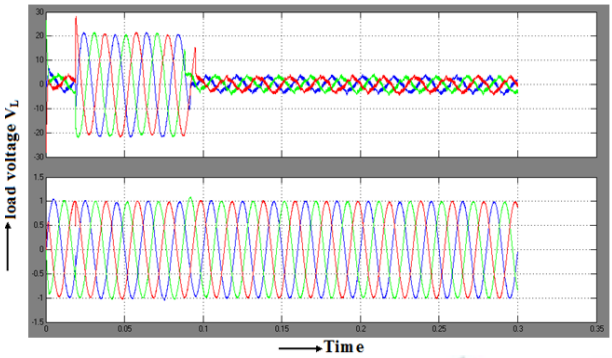

Fig 6.16 injected voltage by the DVR ANN

6.5 THD Comparison Between Controllers

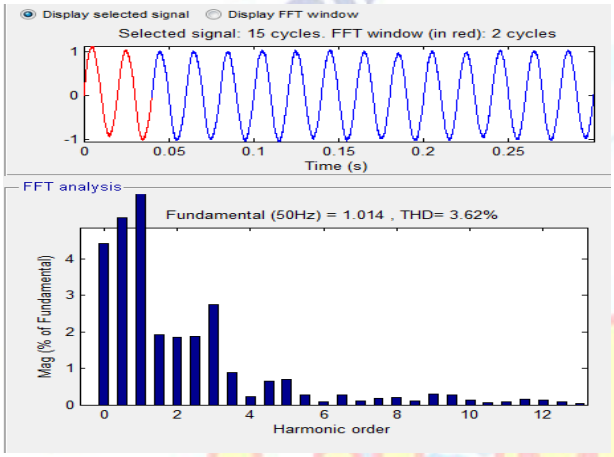

Fig 6.17 THD with PI

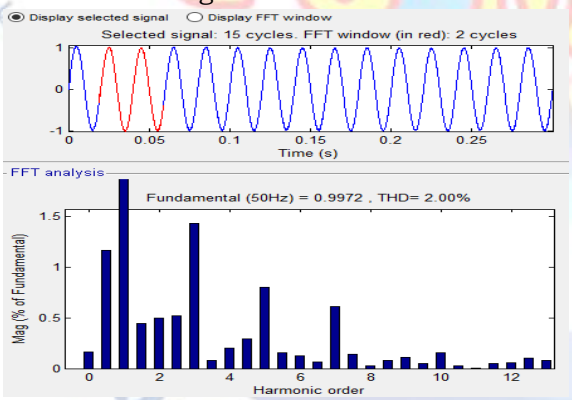

Fig 6.18 THD with Fuzzy

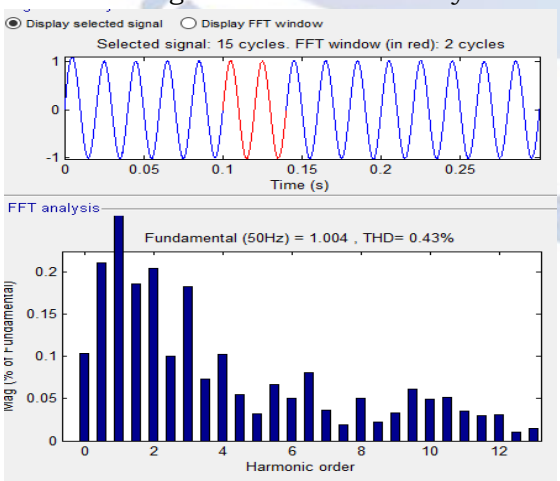

Fig 6.18 THD with ANN

Here are three controllers utilized to control voltage drop i.e, PI, FUZZY and ANN. To propose the best controller for filling the necessary need of voltage control the Total Harmonic Distortion (THD) of three controllers are thought about. The controller with less THD is recommended as the best controller. By watching the over three figures it was unquestionably ANN controller with less THD and henceforth it is the best controller when contrasted with its partner.

VII. Conclusion

In this paper, a DVR obtained by means of the series connection of two three-phase inverters through an OEW transformer was presented. The ability of a Dynamic voltage restorer (DVR) to compensate voltage sag depends upon the capacity of energy storage device. Here we had considered a distribution system with a three phase to ground fault. A voltage sag of 0.4V(pu) has occurred in the distribution line and there is said to be a drop in load voltage. PI, Fuzzy Logic controller and Artificial Neural Network are simulated and performance of DVR is analysed. All the controllers gave an optimum performance and have the ability to bring the source voltage back to 1.0pu in faulty conditions. The Artificial Neural Network gave a better performance than the PI and fuzzy controller in terms of total harmonic distortion of (0.43%) than PI (3.62%) and fuzzy controller (2.00%) in improving the source voltage to normal conditions. The future scope for the project is design of a DVR with sliding mode control using fuzzy logic as a controller.

References

[1] Omar, R. Rahim, N.A. "New Control Technique Applied in Dynamic Voltage Restorer for Voltage Sag Mitigation" Industrial Electronics and Applications, 2009. ICIEA 2009.4th IEEE Conference.

[2] Faisal, M.F. "Power Quality Management Program: TNB's Experience", Distribution Engineering, TNB 2005.

[3] Dinesh, Lakhinana, Harish Sesham, and Vasupalli Manoj. "Simulation of D-Statcom with hysteresis current controller for harmonic reduction." Emerging Trends in Electrical Engineering and Energy Management (ICETEEEM), 2012 International Conference on. IEEE, 2012.

[4] Wahab, S.W. Yusof, A.M. "Voltage Sag Mitigation Using Dynamic Voltage Restorer (DVR) System, ELEKTRIKA, 8(2),2006, 32-37.

[5] IEEE Standard Board (1995), "IEEE Std. 1159-1995", IEEE Recommended Practice for Monitoring Electric Power Quality". IEEE Inc. New York.

[6] Kim H. "Minimal Energy Control for a Dynamic Voltage Restorer", In proceedings of the Power Conversion Conference, Osaka, Japan, 2002, pp. 428-433.

[7] V.K. Ramachandaramurthy, A. Arulampalam, C.Fitzer, C. Zhan, M. Barnes and N. Jenkins"Supervisory control of dynamic voltage restorers "IEE Proc.-Gener. Transm.Distrib. Vol. 151, No. 4, pp. 509- 516, July 2004.

[8] P. Boonchiam and N. Mithulananthan, "Understanding of Dynamic Voltage Restorers through MATLAB Simulation," Thammasat Int. J. Sc. Tech., Vol. 11, No. 3, July-Sept 2006.

[9] Nise, N. S. "Control Systems Engineering" 5th Edition, John Wiley &Son, Inc. 2008

[10] Mattavelli, P. Rossetto, L. Spiazzi, G. Tenti, P. "General-Purpose Fuzzy Controller for DC-DC Converter" IEEE Transactions on Power Electronics, Vol. 12, No. 1, January 1997.

[11] Nemati, M. Yousefian, H. A. Afshari, R. "Recognize The Role of A DVR in Power Systems" International Journal of Recent Trends in Engineering, Vol 2, No. 7, November 2009.

[12] Benachaiba, C. Ferdi, B. "Voltage Quality Improvement Using DVR", Electrical Power Quality and Utilization, Journal Vol. XIV, No. 1, 2008.