Available online at: http://www.ijmtst.com/vol6issue03.html

International Journal for Modern Trends in Science and Technology

ISSN: 2455-3778 :: Volume: 06, Issue No: 03, March 2020

An Efficient Constant Current Controller and ANN Controller for RES Network

Koutha Harshitha[1] | B Kavya Santhoshi[2]| Kasireddi Teja[1]| Pulari Varaprasad[1]

[1]UG Students, Department of Electrical and Electronics Engineering, Godavari Institute of Engineering and Technology (A), Rajahmundry, Andhra Pradesh, India.

[2]Assistant Professor, Department of Electrical and Electronics Engineering, Godavari Institute of Engineering and Technology (A), Rajahmundry, Andhra Pradesh, India.

To Cite this Article

Koutha Harshitha, B Kavya Santhoshi, Kasireddi Teja and Pulari Varaprasad, "An Efficient Constant Current Controller and ANN Controller for RES Network", *International Journal for Modern Trends in Science and Technology*, Vol. 06, Issue 03, March 2020, pp.:102-106.

Article Info

Received on 06-February-2020, Revised on 27-February-2020, Accepted on 06-March-2020, Published on 13-March-2020.

ABSTRACT

This work presents the detailed modeling of grid integrated with the Photovoltaic Solar Power Generator. As the Photovoltaic System uses the solar energy as one of the renewable energies for the electrical energy production, it is inculcated in this work. The PV system is developing very rapidly as compared to its counterparts of the renewable energies. The DC voltage generated by the PV system is boosted by the DC-DC Boost converter. The utility grid is incorporated with the PV Solar Power Generator through the 3-phase PWM DC-AC inverter, whose control is provided by a constant current controller. This controller uses a 3-phase locked loop (PLL) for tracking the phase angle of the utility grid and reacts fast enough to the changes in load or grid connection states, as a result, it seems to be efficient in supplying to load the constant voltage without phase jump. The complete mathematical model for the grid connected PV system is developed and simulated. The results verify that the proposed system is proficient to supply the local loads. In this work, ANN controller is used for achieving constant current control.

KEYWORDS: *PV system, CCC,PWM Inverter, ANN controller*

I. INTRODUCTION

A photovoltaic cell or solar panel is an equipment that converts solar power into voltage separately photovoltaic effectiveness. Sometimes the term photovoltaic cell is placed for designs planned explicitly to round up strength from dawn, but the term solar cell is used when the authority is unmentioned. Assemblies of cells are well-known make the photovoltaic cell, stellar detail, or photovoltaic arrays. Photovoltaic is the court of telecommunications and probe similar to the petition of solar collectors for solar radiation

Working:

Solar strength organizations enlist photovoltaic cell to apply the cheery electricity of daytime instantaneously into mechanical strength. The photovoltaic solar cell is semiconductor devices and that apply the sun rise into heat. Solar cells whatever employ transparent semiconductors, in the manner that silicon, show the advantages of supercharged and trustworthiness. Photovoltaic

cells are silicon-based crystal wafers and that present a potential betwixt reversed exteriors when small strikes one of the skins, that skin has a river collecting grid next.

APPLICATIONS :

Solar cells can also be solicited alternative stereos devices to complete self-law feasible in the sun. There is photovoltaic cell contact disc, cosmic bike small and cosmic camping lanterns that society can use for day-to-day use.

Solar strength plants can face high station costs, granting this archaic decreasing by virtue of the information band. Developing countries have commenced enlarging wind power plants, restoration alternative experts of dynamism crop.

In 2008, solar radiation is given 0.02% of the world's equal strength transfer. Use out-of-date doubling without exception two, or fewer, agedness. If it continued at that rate, wind power would develop into the principal dynamism origin, not beyond any decades.

Perturbation and observation is the algorithm perturbs the operating voltage to ensure maximum power. It is also a technique used commenly with wind turbine and photovoltaic solar system to maximize power extraction under all coditions.

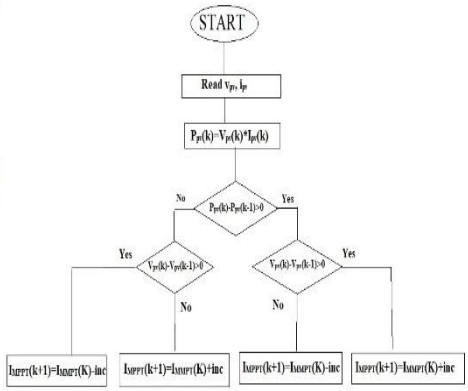

Fig 2.2 perturbation and observation algorithm

II. Sine PWM & LC Filter

It is a technique of pulse width modulation used in inverters. An inverter generates an output of AC voltage from an input of DC with the help of switching circuits to reproduce a sine wave by generating one or more square pulses of voltage per half cycle. If the size of the pulses is adjusted, the output is said to be pulse width modulated. With this modulation, some pulses are produced per half cycle. The pulses close to the ends of the half cycle are constantly narrower than the pulses close to the center of the half cycle such that the pulse widths are comparative to the equivalent amplitude of a sine wave at the part of the cycle. To change the efficient output voltage, the width of all pulses are amplified or reduced while keeping the sinusoidal proportionality. With PWM, only the on-time of the pulses are changed during the amplitudes.

PWM is a method of reducing the average power delivered by an electrical signal, by a effectively chopping it up into discreet parts. The average value voltage and current fed to the load is controlled by turning the switches between supply and load on and off at a fast rate. The longer the switch is on compared to the off periods, the higher the total power supplied to the load. Along the MPPT, it is one of the primary method of reducing the output of solar panel to that which can be utilized by a battery. PWM is particularly suited for running initial loads such as motors, which are not as easily affected by this discrete switching, because they have inertia to react slow The PWM switching frequency has to be high enough not to effect the load, which is to say that the resultant waveform perceived by the load must be as smooth as possible.

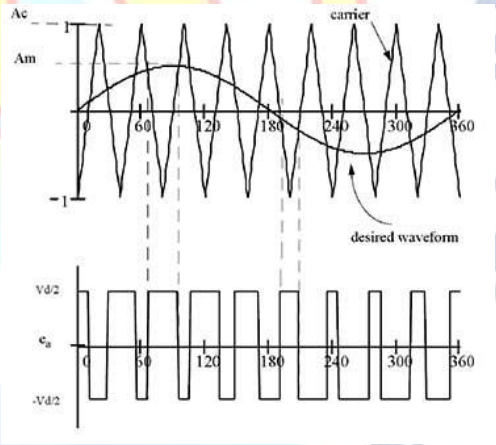

Fig 2.3 Sine PWM Waveform

LC Filter

A filter circuit is a device to remove the ac components of the rectified output, but allows the DC components to reach the load

The harmonics generated by the inverter is reduced by the 3 phase LC filter.

LC filter

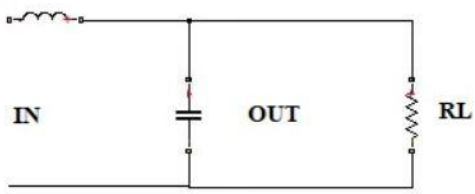

Fig 2.5 LC circuit as a low-pass filter

III. GRID INTEGRATED PV SYSTEM WITH CONTROLLERS

There are two types of controllers we are using in the grid integrated PV system

They are:

1. Constant current controller
2. ANN controller

Constant Current Controller

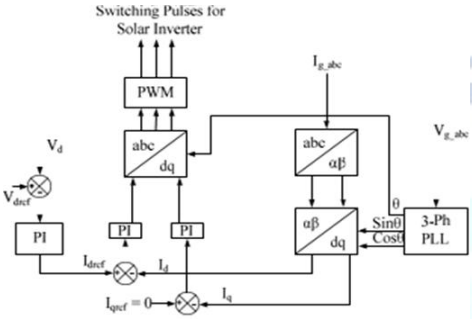

Fig 3.1 Block Diagram of Constant Current Controller

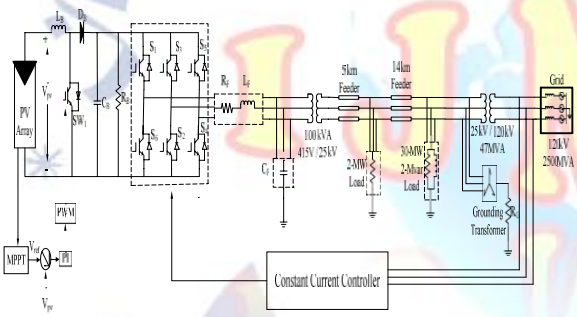

Fig.4.1 configuration of grid integrated PV system

The proposed block diagram shows the configuration of the grid integrated PV system. The PV array is the combination of series and parallel connected PV module. Each PV module has series connected PV cell according to the voltage requirements. The MPPT technique is applied for operating the PV array at the maximum power point. The Vref generated by the MPPT is the desired DC voltage of the PV array and compared with the actual voltage of the PV array. The error signal is processed by the PI controller for minimizing the error. That control signal is compared with the triangular waveform for obtaining the switching pulses for the switch SW1. This arrangement controls the duty ratio for varying the load according to the MPPT. The boost converter stepping up the voltage level of the PV array.Artificial neural network

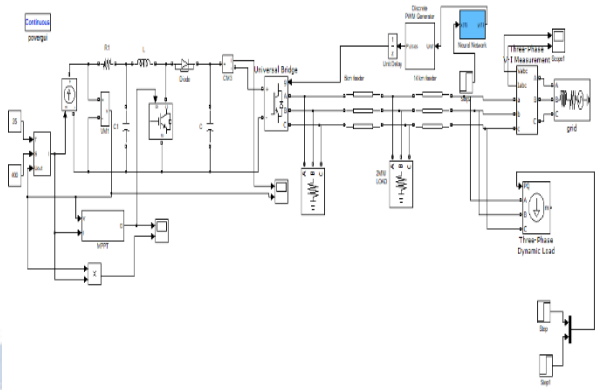

4.2. Artificial neural network:

IV. SIMULATION RESULTS

Matlab 2009(a) was used to perform the simulation circuit. The parameters used for simulation are tabulated below in table 5.1

PARAMETER	VALUES
R_1	1 OHMS
L_1	0.01 H
DIODE R_{ON}	0.001 OHMS
INDUCTANCE	0 H
V_F	0.8V
IGBT R_{ON}	0.001 OHMS
L_{ON}	0 H
V_F	1 V
R_S	$1e^{-5}$
LOAD-1	2MW
LOAD-2	30MW,2MVAR
GRID LOAD	120KV,2500MVA

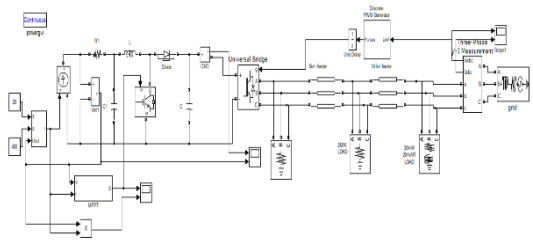

Fig.6.1.Simulation circuit.

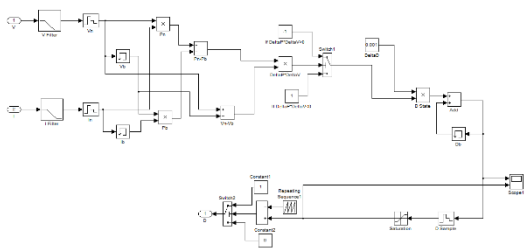

Fig.6.2. MPPT algorithm to generate the triggering pulses.

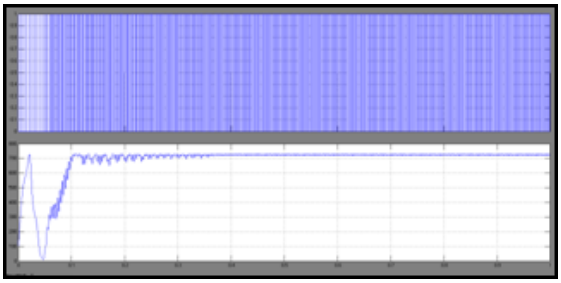

Fig.6.3. MPPT results.

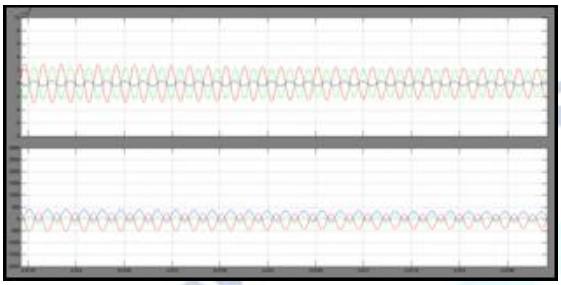

Fig.6.4. OUTPUT RESLUTS.

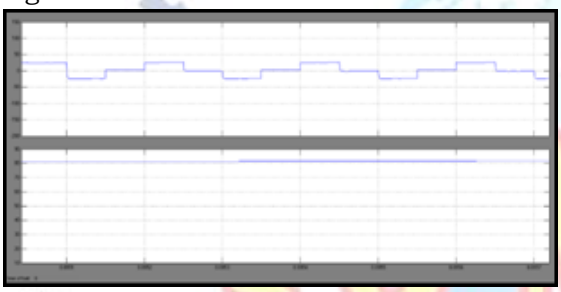

Fig 6.5 CONSTANT CURRENT

ANN controller:

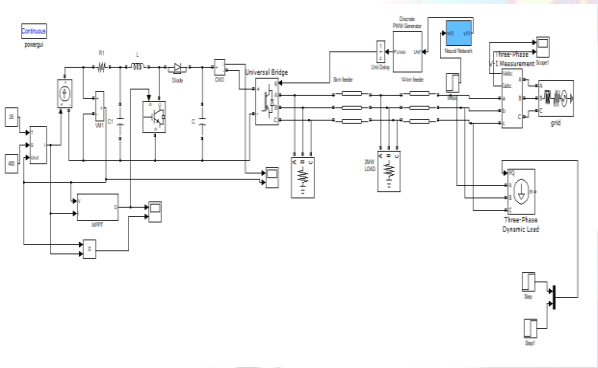

Fig.6.5. With ANN controller.

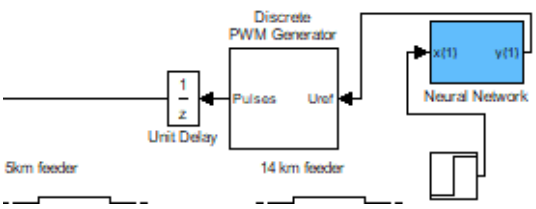

Fig.4.6 ANN controller.

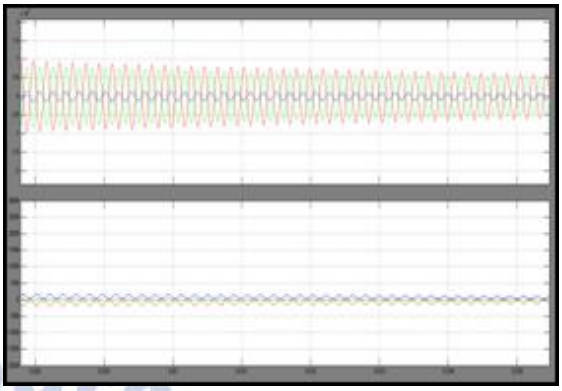

Fig.6.7. Output results.

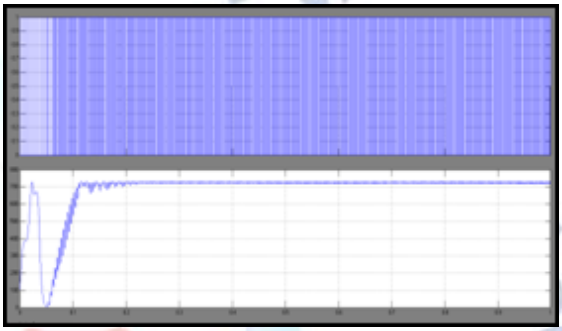

Fig.6.8. Solar panel output with MPPT algorithm

We are using ANN controller to maintain the constant current. We use perturb and observe algorithm type in MPPT and sine wave pulse generator in PWM technique. The constant current appears at $81*10^4$A. The 2-level inverters switches are operated with the switching pulses generated from the PWM generator. Harmonics at grid are reduced by using constant current controller. The voltage appears at $25*10^4$V. The MPPT occurs at 720V. The results obtained from ANN controller and constant current controller are presented.

V. CONCLUSION

For improving the energy efficiency and power quality issues with the increment of the world energy demand, the power generation using the renewable energy source isthe only solution. There are several countries located in the tropical and temperature regions, where the direct solar density may reach upto1000W/m2.HencePVsystemis considered as a primary resource. In this paper, the detailed modeling of grid connected PVgenerationsystemisdeveloped.TheDC-DCboostc onverterisusedtooptimizethe PV array output with the closed loop control for keeping the DC bus voltage to be constant. The 2 level 3-phase inverter is converting the DC into the sinusoidal AC voltage. The control of the solar inverter is provided through the constant current controller.Thiscontrollertracksthephaseandfreque

ncyof the utility grid voltageusing the Phase-Locked-Loop (PLL) system and generates the switching pulses for the solar inverter. Using this controller the out put voltage of the solar inverter and the grid voltage are in phase. Thus the PV system can be integrated to the grid. The simulation results the presented in this paper to validate the grid connected PV system model and the applied control scheme.

REFERENCES

[1] K.T.Chau and C.C.Chan, "Emerging energy –efficient technologies for hybrid electric vehicles,"Proc.IEEE,vol.95,no.4,pp.821–835,Apr.2007.

[2] S.P.Richardson ,D.Flynn, and A.Keane,"Optimal charging of electric vehicles in low- voltage distribution systems,"IEEETrans.Power.Syst.,vol.27,no.1,pp.268–279, Feb. 2012.

[3] K.Qian,C.Zhou,M.Allan,andY.Yuan,"Modelingofloaddemanddduetoevbattery chargingindistributionsystems,"IEEETrans.Power.Syst.,vol.26,no.2,pp.802–810, May2011.

[4] P.Zhang,K.Qian,C.Zhou,B.G.Stewart,andD.M.Hepburn,"A methodologyforoptimization of power systems demand due to electric vehicle charging load," IEEE Trans.Power.Syst.,vol.27,no.3, pp.1628–1636,Aug.2012.

[5] K.Clement-Nyns,E.Haesen,andJ.Driesen,"Theimpactofchargingplug-inhybrid electricvehiclesonaresidentialdistributiongrid,"IEEETrans.PowerSyst.,vol.25,no.1, pp.371–380,Feb.2010.

[6] J.X.JinandX.Y.Chen,"StudyontheSMESapplicationsolutionsforsmartgrid,"PhysicsProcedia,vol.36,pp.902–907,2012.

[7] C.A.Luongo,"Superconductingstoragesystems:Anoverview,"IEEETrans.Magn., vol.31,no.4,pp.2214–2223,Jul.1996.

[8] S.Kolluri,"Applicationofdistributedsuperconductingmagneticenergystorage system(D-SMES)intheentergysystemtoimprovevoltagestability,"inProc.IEEE PowerEng.Soc.WinterMeet.,2002,vol.2,pp.838–841.

[9] H.A.Peterson,N.Mohan,andR.W.Boom,"Superconductiveenergystorageinductor-converterunitsforpowersystems,"IEEE Trans.PowerApp.Syst.,vol.PAS-94,no.4,pp. 1337–1346,Jul.1975.

[10] M.V.AwareandD.Sutanto,"SMESforprotectionofdistributed criticalloads,"IEEE Trans.PowerDel.,vol.19,no.3,pp.1267–1275,Jul.2004.