Available online at: http://www.ijmtst.com/vol5issue09.html

International Journal for Modern Trends in Science and Technology

ISSN: 2455-3778 :: Volume: 05, Issue No: 09, September 2019

Modelling of PMSG based Wind Turbine System using Fuzzy Controller

Telluri Sneha[1] | J Charan Kumar[2]

[1]PG Scholar Department of EEE, Sri Vani School of Engineering, Chevuturu, Andhra Pradesh, India

[2]Assistant Professor, Department of EEE, Sri Vani School of Engineering, Chevuturu, Andhra Pradesh, India

To Cite this Article

Telluri Sneha and J Charan Kumar, "Modelling of PMSG based Wind Turbine System using Fuzzy Controller", *International Journal for Modern Trends in Science and Technology*, Vol. 05, Issue 09, September 2019, pp.-26-30.

Article Info

Received on 26-July-2019, Revised on 28-August-2019, Accepted on 02-September-2019, Published on 07-September-2019.

ABSTRACT

This paper presents a comparative analysis of three control algorithms for a wind turbine generator using a variable speed permanent magnet synchronous generator (PMSG). The design methodologies of the conventional PI based controller, the Taylor series expansion linear approximation based (TSLA-based) controller and the feedback linearization based (FL-based) nonlinear controller are provided. The objective is to keep the wind turbine operating at its optimum rotor speed (MPPT control), while insuring the power transfer from the turbine to the generator, regardless of the wind speed. The controller gains of the nonlinear controller are determined via Linear Quadratic Optimal Control (LQOC) approach. The results show a better control performance for the nonlinear controller. This performance is characterized by fast and smooth transient responses as well as a zero steady state error and reference tracking quality.

Keywords: *wind turbine, PMSG, MPPT Control.*

Copyright © 2019 International Journal for Modern Trends in Science and Technology
All rights reserved.

I. INTRODUCTION

In the present scenario, wind energy system is fast growing power generation system in renewable energy systems. Wind-turbine systems can work in two modes of operation: grid-connected and stand-alone. However, the majority of them operating in the field are grid-connected. In this mode, the power generated is directly uploaded to the grid. When WT are not generating enough energy in low wind time intervals, electricity from the grid supplies costumer needs. WT in stand-alone mode are usually employed as small power capacity to power homes, farms, and isolated areas where access to the utility grid is remote or costly. Since the power generated from the wind is not always available, other energy sources are commonly required in stand-alone systems. It is common that a stand-alone wind energy system operates with diesel generators or energy storage systems to form a more reliable distributed generation (DG) system.

Due to their random nature, wind-turbine systems are characterized by an unpredictable output. Hence, a suitable control system is required to ensure a good system dynamic behavior and an efficient extraction of the power from a wind turbine. This has been the subject of several recent research investigations. Most of the proposed control methods for WECS in the literature employed the conventional PI-based control method with different techniques. Methods of nonlinear control that use input-output feedback linearization method for WECS have been

reported. Feedback linearization control method has the advantage of being able to be used to both stabilize a nonlinear system, such as WECS, simultaneously tracking many control reference signals. Also, it allows the user to have a complete decoupled control system where each variable can be controlled independently.

II. ARCHITECTURE OF PROPOSED GRID CONNECTED WIND SYSTEM

A. Grid Integration

Figure 1 shows the grid interconnected Wind Energy system. The main components in this configuration are 1) PMSG generator, 2) Pitch angle Controller, 3) Converters, and 4) Filters.

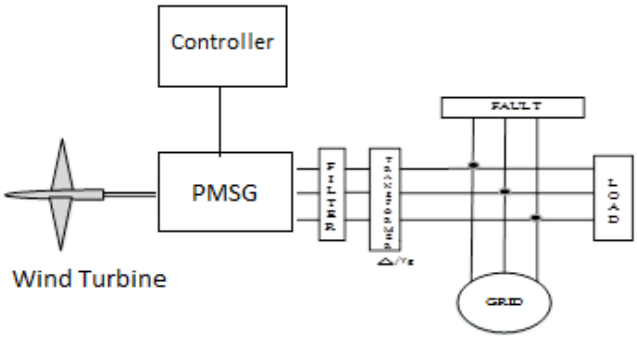

Figure 1: Hybrid System

B. Wind Turbine

Generally, wind turbine converts wind energy to mechanical (Kinetic) energy and it further converted into electrical energy with the help of generator. Wind turbines are mainly classified into two categories namely a) Horizontal axis wind turbine and b) Vertical axis wind turbine. The main components of the wind energy system are a) Turbine Shaft, b) Gear ratio Control (which Converts low speed shaft to high speed shaft), c) generator, d) Wind Vane and Anemometer, and e) Pitch Controller.

The mechanical power Expression for Wind energy system is

$$P_m = \frac{1}{2}\rho A V^3 C_p(\lambda,\beta)$$

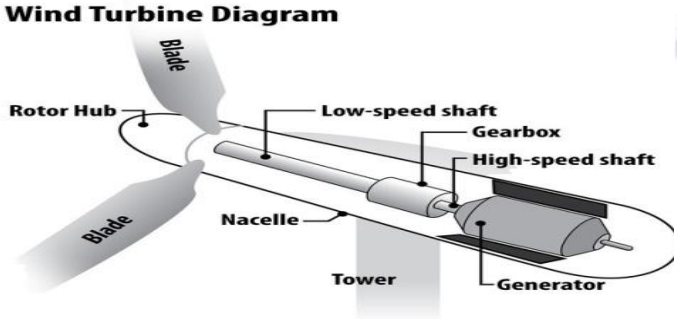

Figure 2: Basic diagram of wind turbine

C. Architecture of PMSG

The generator considered for wind system in the paper as Permanent Magnet Synchronous Generator (PMSG). The wind turbine generates torque from wind power. The torque is transferred through the generator shaft to the rotor of the generator. The generator produces an electrical torque, and the difference between the mechanical torque from the wind turbine and the electrical torque from the generator determines whether the mechanical system accelerates, decelerates, or remains at constant speed. The basic architecture for the PMSG based wind system is shown in figure 3.

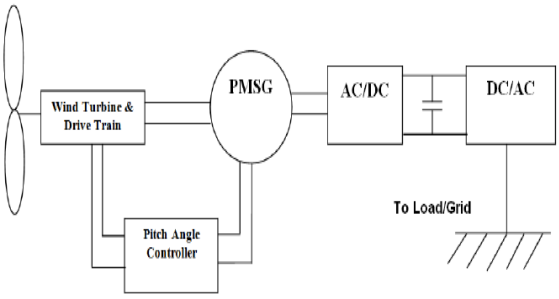

Figure 3: Structure of Permanent Magnet Synchronous Machine in Wind Turbine

The generator model is implemented entirely in -coordinates. It means that there are no AC-states in the model. The generator is modelled with DC voltages and currents in a rotor-fixed rotating coordinate system. The equations for the -axis and -axis currents are defined as

$$\frac{di_{sd}}{dt} = -\frac{R_{sa}}{L_{sd}} i_{sd} + w_s \frac{L_{sq}}{L_{sd}} i_{sq} + \frac{1}{L_{sd}} u_{sd}$$

$$\frac{di_{sq}}{dt} = -\frac{R_{sa}}{L_{sq}} i_{sq} - w_s \left(\frac{L_{sd}}{L_{sq}} i_{sd} + \frac{1}{L_{sq}} \varphi_p\right) + \frac{1}{L_{sq}} u_{sd}$$

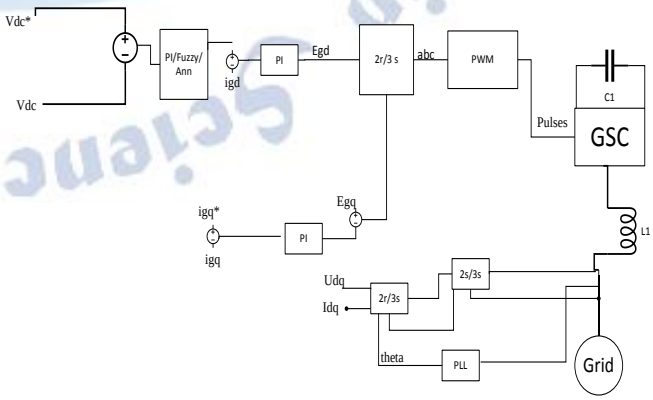

Figure 4 PMSG Control Diagram

The generator is connected to a three-phase inverter which rectifies the current from the generator to charge a DC-link capacitor. The DC-link feeds a second three-phase inverter which is connected to the grid through a transformer. Through the control system, the information of wind speed, pitch angel, rotor RPM, and inverter output is accepted to compare with the grid-side data.

D. PI Controller

A PI Controller (proportional-integral controller) is a combination of proportional and integral controller which is used for eliminating steady state error and peak overshoots [10-11]. The absence of derivative controller shows more stability under noise conditions. This is because the derivative controller is more sensitive under high frequency systems.

The general expression for PI controller is expressed as,

$$K_P\Delta + K_I \int \Delta dt$$

III. TSLA-BASED CONTROLLER DESIGN

The linearized model that approximates the system behavior around the operating point using Taylor series expansion is expressed as follows:

$$\frac{\mathrm{d}}{\mathrm{d}t}\begin{bmatrix}\hat{i}_{ds}\\ \hat{i}_{qs}\\ \hat{\omega}_r\end{bmatrix} = \begin{bmatrix}-\frac{R_s}{L_d} & \frac{L_q}{L_d}\omega_{r0} & 0\\ -\frac{L_d}{L_q}\omega_{r0} & -\frac{R_s}{L_q} & -\frac{\lambda_r+L_d i_{ds0}}{L_q}\\ 0 & \frac{3P^2}{2J}\lambda_r & k_{wt}\frac{P^2}{J}\frac{v_{w0}^3}{\omega_{r0}^2}\end{bmatrix}\begin{bmatrix}\hat{i}_{ds}\\ \hat{i}_{qs}\\ \hat{\omega}_r\end{bmatrix} + \begin{bmatrix}\frac{1}{L_d} & 0\\ 0 & \frac{1}{L_q}\\ 0 & 0\end{bmatrix}\begin{bmatrix}\hat{u}_{ds}\\ \hat{u}_{qs}\end{bmatrix} + \begin{bmatrix}E_1(i_{ds0})\\ E_2(i_{ds0})\\ E_3(\omega_{r0})\end{bmatrix}$$

To stabilize the system at the operating point, a state feedback controller is used to design the TSLA-based Controller. The control input is as follows

$$\begin{bmatrix}u_{ds}\\ u_{qs}\end{bmatrix} = -k_{ts}\begin{bmatrix}i_{ds} - i_{ds0}\\ i_{qs} - i_{qs0}\\ \omega_r - \omega_{r0}\end{bmatrix}$$

Proposed MIMO Nonlinear Controller Design:

For the design of the proposed MIMO nonlinear controller, two control objectives have been considered in order to: 1) keep the wind turbine operating at its maximum power by controlling Wr ; 2) achieve a linear relationship between the stator current and the electromagnetic torque by controlling the stator d-axis current, Ids.

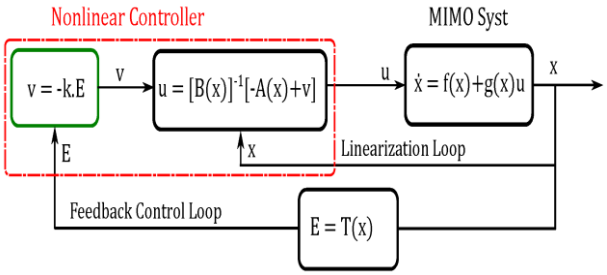

Figure 5: Proposed MIMO controller structure

One of the advantages of feedback linearization versus traditional PI-based method, is that it is possible to reduction the number of gains of controller with feedback linearization. In the traditional schemes, at the generator side, the generator active power and rotor speed are controlled through three PI controllers in cascade with two gains each (kp and ki). In contrast, in the feedback linearization method proposed in this paper, only three gains are needed (instead of six in the case of PI) to perform the same task.

$$\frac{\mathrm{d}}{\mathrm{d}t}\begin{bmatrix}i_{ds}\\ i_{qs}\\ \omega_r\end{bmatrix} = \begin{bmatrix}-\frac{R_s}{L_d} & \frac{L_q}{L_d}\omega_r & 0\\ -\frac{L_d}{L_q}\omega_r & -\frac{R_s}{L_q} & -\frac{\lambda_r}{L_q}\\ 0 & \frac{3P^2}{2J}\lambda_r & k_{wt}\frac{P^2}{J}\frac{v_w^3}{\omega_r^2}\end{bmatrix}\begin{bmatrix}i_{ds}\\ i_{qs}\\ \omega_r\end{bmatrix} + \begin{bmatrix}\frac{1}{L_d} & 0\\ 0 & \frac{1}{L_q}\\ 0 & 0\end{bmatrix}\begin{bmatrix}u_{ds}\\ u_{qs}\end{bmatrix}$$

$$\underbrace{\begin{bmatrix}\dot{y}_1\\ \ddot{y}_2\end{bmatrix}}_{T(x)} = \underbrace{\begin{bmatrix}A_1(x)\\ A_2(x)\end{bmatrix}}_{A(x)} + \underbrace{\begin{bmatrix}\frac{1}{L_d} & 0\\ 0 & \frac{3P^2}{2JL_q}\lambda_r\end{bmatrix}}_{B(x)}\underbrace{\begin{bmatrix}u_{ds}\\ u_{qs}\end{bmatrix}}_{u}$$

IV. ARTIFICIAL NEURAL NETWORKS

The neuro controller is one of the important controllers in adaptive techniques. This section provides the information regarding the designing of neuro controller. This neural controller has 2 inputs that are Δe (x) and Δde (y) and it has 1 output that is f ∈ {x, y}. Each input consists of 5 membership functions. Figure 6 shows the configuration of ANN controller.

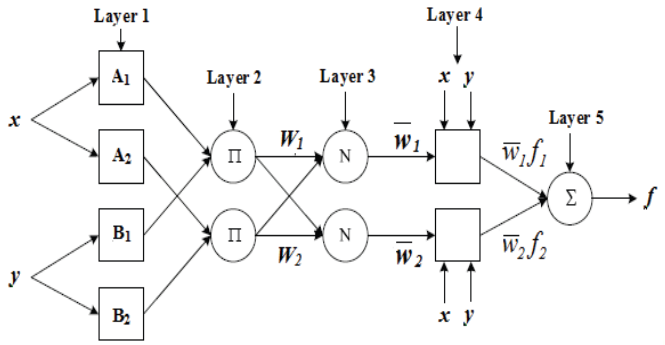

Figure 6: ANN architecture

Neural networks typically consist of multiple layers or a cube design, and the signal path traverses from front to back. Back propagation is where the forward stimulation is used to reset weights on the "front" neural units and this is sometimes done in combination with training where the correct result is known.

Algorithm for Neural Structure:

1. Assume the inputs and outputs in the normalized form with respect to their maximum values and these are in the range of 0-1.
2. Assure the No.of input stages given network.
3. Indicate the No.of hidden layers for the network.
4. Design the new feed forward network based on the system parameters 'transig' and 'poslin'.
5. Assume the learning rate be 0.02 for the given network.
6. Identify the number of iterations for the system.
7. Enter the goal.
8. Train the network based on the given input and outputs.
9. For the given network Generate simulation with a command 'genism'

The goal of the neural network is to solve problems in the same way that the human brain would, although several neural networks are much more abstract. Modern neural network projects typically work with a few thousand to a few million neural units and millions of connections, which are still several orders of magnitude less complex than the human brain and closer to the computing power of a worm.

V. SIMULATION DIAGRAM AND RESULTS

In order to demonstrate the effectiveness of the proposed nonlinear MIMO control feedback linearization based scheme (FL-based), simulations have been carried out using Matlab/Simulink. The generator used in the study is a variable speed non-salient-pole PMSG driven by a wind turbine.

Case 1: Simulation Result for PI Controller

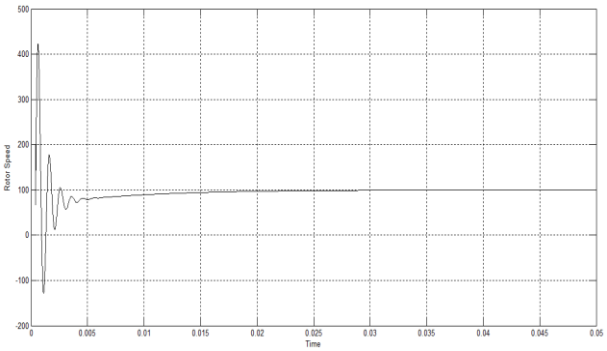

Figure 6: Rotor Speed Waveform with Conventional Controller

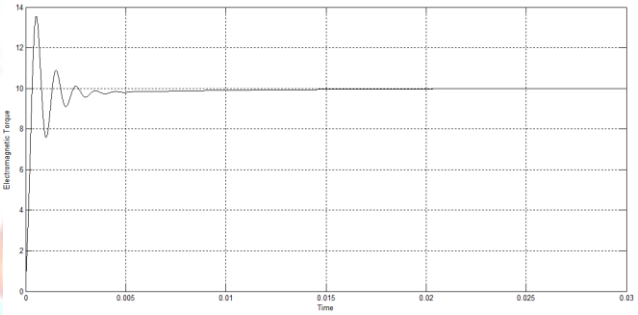

Figure 7: Electromagnetic torque waveform with Conventional Controller

Case 2: Simulation Result for Non-Linear Controller

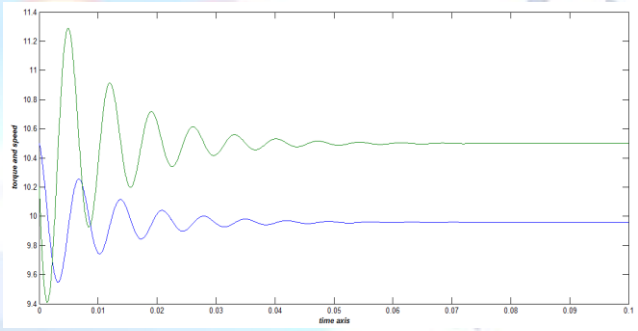

Figure 8: Simulation result for rotor speed and torque with NL-Controller

Case 3: Simulation Result for ANN Controller

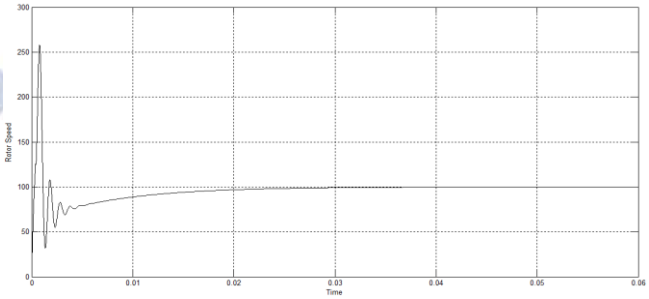

Figure 9: Simulation result for rotor speed with ANN-Controller

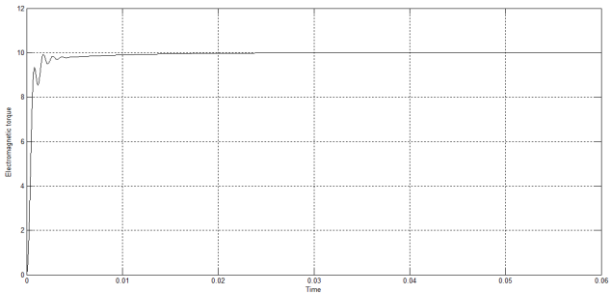

Figure 10: Simulation result for Electromagnetic torque with ANN-Controller

VI. CONCLUSION

This paper has proposed an ANN Controller along with nonlinear MIMO controller based on feedback linearization theory to regulate the generator current and rotor speed of a WECS. The controller gains have been selected by using optimal control. The performance and robustness of the proposed ANN controller have been compared to those of the traditional PI-based controller and the feedback controller based Taylor series expansion linear approximation (TSLA-based). For this purpose, full detailed PI-based and TSLA-based control schemes for WECS have also been given. The comparison has been done under three case of studies: 1) constant wind speed, 2) variable wind speed with constant generator parameters and 3) variable wind speed with variable generator parameters. The simulation results show that applying ANN based control strategy combined with optimal control, while keeping the wind turbine operating at its optimal maximum power and controlling the generator active power, provides a better control performance compare to the PI, TSLA and non-linear MIMO based control systems.

REFERENCES

[1] G. W. E. G. Council, "Global wind report 2015," 2016. [Online]. Available: www.gwec.net

[2] B. Wu, Y. Lang, N. Zargari, and S. Kouro, Power conversion and control of wind energy systems. John Wiley & Sons, 2011, vol. 77.

[3] J. Thongam, R. Beguenane, A. Okou, M. Tarbouchi, A. Merabet, and P. Bouchard, "A method of tracking maximum power points in variable speed wind energy conversion systems," in Power Electronics, Electrical Drives, Automation and Motion (SPEED AM), 2012 International Symposium on. IEEE, 2012, pp. 1095- 1100.

[4] S. Li, T. A. Haskew, R. P. Swatloski, and W. Gathings, "Optimal and direct-current vector control of direct-driven pmsg wind turbines," IEEE Transactions on power electronics, vol. 27, no. 5, pp. 2325- 2337, 2012.

[5] C. Lumbreras, J. M. Guerrero, P. Garda, F. Briz, and D. D. Reigosa, "Control of a small wind turbine in the high wind speed region," IEEE Transactions on Power Electronics, vol. 31, no. 10, pp. 6980- 6991, 2016.

[6] N. A. Orlando, M. Liserre, R. A. Mastromauro, and A. Dell' Aquila, "A survey of control issues in pmsg-based small wind-turbine systems," IEEE Transactions on Industrial Infonnatics, vol. 9, no. 3, pp. 1211- 1221, 2013.

[7] B. Housseini, F. A. Okou, and R. Beguenane, "A unified nonlinear controller design for on-grid/off-grid wind energy battery storage system," in Industrial Electronics Society, IECON 2015- 41st Annual Conference of the IEEE. IEEE, 2015, pp. 005273- 005278.

[8] K.-H. Kim, Y.-C. leung, D.-C. Lee, and H.-G. Kim, "Lvrt scheme of pmsg wind power systems based on feedback linearization," IEEE transactions on power electronics, vol. 27, no. 5, pp. 2376-2384, 2012.

[9] S. Zhou, 1. Liu, L. Zhou, and Y. Zhu, "Improved dc-link voltage control of pmsg wecs based on feedback linearization under grid faults," in Applied Power Electronics Conference and Exposition (APEC), 2013 Twenty-Eighth Annual IEEE. IEEE, 2013, pp. 2895- 2899.

[10] B. K. Bose, "Power electronics and ac drive," 1986.

[11] Vellanki Mehar Jyothi, T. Vijay Muni, S V N L Lalitha, "An Optimal Energy Management System for PV/Battery Standalone System," International Journal of Electrical and Computer Engineering, vol. 6, pp. 2538, 2016.

[12] T. Vijay Muni, D. Priyanka, S V N L Lalitha, "Fast Acting MPPT Algorithm for Soft Switching Interleaved Boost Converter for Solar Photovoltaic System", Journal of Advanced Research in Dynamical & Control Systems, Vol. 10, 09-Special Issue, 2018.

[13] T Vijay Muni, SVNL Lalitha, B Krishna Suma, B Venkateswaramma, "A new approach to achieve a fast acting MPPT technique for solar photovoltaic system under fast varying solar radiation", International Journal of Engineering & Technology, Volume7, Issue 2.20, pp-131-135.

[14] T Vijay Muni, S V N L Lalitha, "Power Management Strategy in Solar PV System with Battery Protection Scheme", International Journal of Innovative Technology and Exploring Engineering, Volume 8, Issue 6, pp-960-964.

[15] Muni, T.V.; Kishore, K.V. Experimental Setup of Solar–Wind Hybrid Power System Interface to Grid System. Int. J. Modern Trends Sci. Technol. 2016, 2, 1–6.

[16] T Vijay Muni, S V N L Lalitha, "Fast Acting MPPT Controller for Solar PV with Energy Management for DC Microgrid", International Journal of Engineering and Advanced Technology (IJEAT), Volume 8, Issue 5, pp-1539-1544.

[17] D. Ravi Kishore, and T. Vijay Muni, "Efficient energy management control strategy by model predictive control for standalone dc micro grids", AIP Conference Proceedings 1992, 030012 (2018); doi: 10.1063/1.5047963