International Journal for Modern Trends in Science and Technology
Volume: 03, Issue No: 07, July 2017
ISSN: 2455-3778
http://www.ijmtst.com

High Efficient Seven-Level Inverter for PV Electric generation

Shaik Zannath[1] | Shaik Hameed[2]

[1]PG Scholar, Department of EEE, Quba College of Engineering and Technology, Nellore, Andhra Pradesh, India.
[2]Associate Professor, Department of EEE, Quba College of Engineering and Technology, Nellore, Andhra Pradesh, India.

To Cite this Article
Shaik Zannath and Shaik Hameed, "High Efficient Seven-Level Inverter for PV Electric generation", *International Journal for Modern Trends in Science and Technology*, Vol. 03, Issue 07, July 2017, pp. 39-44.

ABSTRACT

This paper explains a high efficient seven level inverter for PV electric generation system, which is collected of a dc/dc power converter and a new seven-level inverter. The dc/dc power converters incorporate a dc–dc boost converter and a transformer to change the output voltage of the solar cell array into two self-governing voltage sources with multiple associations. This new seven-level inverter is configured using a capacitor assortment circuit and a full-bridge power converter, associated in cascade. The capacitor assortment circuit changes the two output voltage sources of dc–dc power converter into a three-level dc voltage, and the full-bridge power converter additionally converts this three-level dc voltage into a seven-level ac voltage. Considering this technique, the projected solar PV electric generation system generates a sinusoidal productivity current that is in segment with the utility voltage and is fed into the service. The outstanding features of the prospect planned seven-level inverter are that only six power electronic switches are used, and only one power electronic switch is switched at elevated frequency at whichever time. A model is developed and experienced to authenticate the presentation of this projected solar power PV electric generation scheme.

Keywords: *Pulse Width Modulated (PWM) Inverter, Multilevel Inverter, Grid Connected, Solar Electric Generation*

I. INTRODUCTION

Never ending energy Renewable power is the energy which comes from natural possessions such as solar, wind, tides and geothermal temperature. These resources are renewable and can be naturally replenished. Apart from the rapidly decreasing reserves of fossil fuels in the world, another major factor working against fossil fuels is the pollution associated with their combustion. Verily renewable energy sources are recognized to be a great extent cleaner and create energy without the destructive effects of pollution dissimilar their conventional corresponding item The power of hydel is plentiful. Hydel power accounts meant for 73% of all renewable power according to the Energy Information Administration (EIA). Hydel power is generated by means of the mechanical energy of flowing stream by forcing it all the way through pipes, which subsequently turns a generator in regulate to generate electrical energy. Hydel power in addition consists of tidal and wave energy together in the early phase of investigates, at the same time as scientists struggle to discover how to tie together energy formed by the ocean's association.

Solar cells prepared of silicon take up the sun's radiation, as well as called (PV) photovoltaic cells. The photovoltaic procedure involves the association and displacement of electrons to take

up the sun's emission and generate electricity. However there are also solar systems that make use of huge size mirrors to heat up water, or create elevated temperatures and produce vapor which is used to rotate a generator.

Wind power is a very straightforward procedure. A wind turbine converts the movement energy of wind into mechanical energy that is used to produce electricity. The energy is feed through a generator, converted yet again into electrical energy, and then transmitted to a power location. Wind power is plentiful.

The practice involves trapping heat underground, and then building energy that rises in the vicinity of the surface in the shape of heat. While these heats perceptibly produce boiling water or vapor, it is harnessed and then used to turn a steam turbine to produce electricity. Geothermal energy was first used for business purposes in the early 1900s.

Photovoltaic compartment produce electric energy control as soon as illuminated by sunlight or simulated light. Toward demonstrating the procedure of a PV cell the p-n homo junction cell will be used. PV cells enclose a joint link junction stuck between two dissimilar materials diagonally which present is a built in electric field pasture. The amalgamation of photons of energy superior than the band gap energy of the semiconductor promotes electrons from the valence band to the transference band, creating hole-electron pairs all the way through the illuminated fraction of the semiconductor .These electron and hole pairs will stream in opposite directions diagonally the intersection thereby create DC power.

In support of the immensity of applications numerous solar cells necessitate to be linked in series or in parallel to generate an adequate amount of voltage and power required. Individual cells are frequently connected into a series string of cells (typically 36 or 72) to achieve the desired output voltage. The absolute assembly is habitually referred to as a component module and manufacturers principally sell modules to customers. The component modules serves an additional function of shielding individual cells from dampen water , dirt, dust etc. seeing that the solar cells are positioned into an encapsulation of sole or dual at glasses. Inside a component the different cells are associated electrically in sequence or in parallel while most modules have a series link Fig 1.3 shows a typical association of how 36 cells are connected in series. In a series link the same current flows all the way through all the cells and the voltage at the component terminals is the summation of the individual voltages of each cell.

An array is a structure that consists of a number of PV modules, mounted on the same plane with electrical connections to provide enough electrical power for a given application. Arrays range in power capability starting all the way hundred watts to hundreds of kilowatts. The connection of modules in an array is similar to the connection of cells in a single module. To boost the voltage, modules are linked in series and to boost the current they are linked in parallel. Matching is again very important for the overall presentation of the array. The structure of an array is given away in Fig 1.4

For an array to execute well all the modules must not be sheltered otherwise it will act as a load resulting in heat that may cause damage. Bypass diodes are typically used to avoid damage although they result in further increase in cost. Amalgamation of bypass diodes in some bulky modules for the duration of manufacturing is not uncommon and reduces the extra wiring obligatory. It must be meaningful out although that it become extremely complicated to put back the diode if it fails.

DC-DC converters are electronic procedure used at whatever time we would like to transform DC electrical power professionally from one voltage stage to a different level. They are desirable for the reason that unlike AC, DC cannot simply be stepped up or down using a transformer. In numerous traditions, a DC-DC converter is the correspondent of a transformer. The dc-dc converters are capable of to be viewed as dc transformer with the purpose of deliver a dc voltage or current at a dissimilar level than the key in supply. Method of Electronic switching performs this dc transformation as in usual transformers and not by means of electromagnetic way. The dc-dc converters find wide applications in regulated switch-mode dc power supplies and in dc motor drive applications.

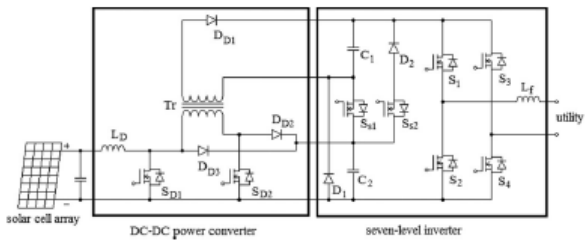

Fig: 1 Configuration of the proposed solar power generation system.

DC-DC converters will be non-linear in character. The design of high performance control for them is a face up to for both the control engineering engineers and power electronics engineers. DC to DC converters are significant in manageable electronic devices such the same as cellular phones and laptop computers, which are abounding with power from batteries principally. Such electronic devices often enclose several sub-circuits, each one with its own voltage level obligation dissimilar than that abounding by the battery or an outside supply (occasionally higher or lower than the supply voltage, and probably even negative voltage).

In the previous section we mentioned the drawbacks of liability this with a linear regulator and offered the case for SMPS. Generically speaking the use of a switch or switches for the purpose of power conversion can be regarded as a SMPS. From nowadays beyond whenever we mention DC-DC Converters we shall address them with reverence to SMPS.

II. Available Exiting system

The power conversion interface is essential to grid linked solar power generation system. The planned solar power generation system is collected of a solar cell array, a DC-DC power converter and a new seven-level inverter. The solar cell array is associated to the DC-DC power converter, and the DC-DC power converter is a boost up converter that incorporate a transformer through a turn ratio of 2:1. The DC-DC power converter converts the output power of the solar cell array into two autonomous voltage sources with multiple associations, which provide the seven-level inverter. This new seven-level inverter is self-possessed of a capacitor selection circuit and a full-bridge power converter, coupled in cascade. The power electronic switches of capacitor assortment circuit decide the discharge of the two capacitors while the two capacitors are being discharged independently or in series. For the reason that of the multiple relationships among the voltages of the DC capacitors, the capacitor collection circuit outputs a three-level DC voltage. The full-bridge power converter further in advance converts this three-level DC voltage to a seven-level AC voltage that is synchronized with the function voltage.

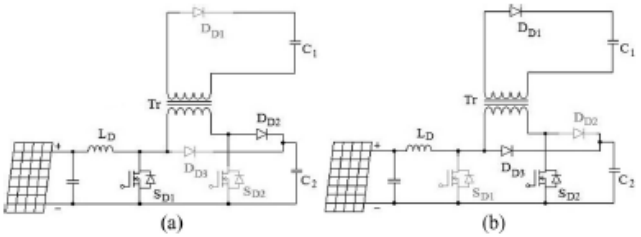

Fig: 2. Operation of dc–dc power converter: (a) SD1 is on and (b) SD1 is off.

III. Projected Proposed System

The DC-DC power converters incorporate a boost converter and a current-fed to the fore converter. The boost converter is self-possessed of an inductor, LD, a power electronic switch, SD1, and a diode, DD3. The boost converter arraigns capacitor C2 of the seven-level inverter. The current-fed forward converter is poised of an inductor, LD, power electronic switches, SD1 and SD2, a transformer and diodes, DD and DD2. The current-fed forward converters arraign capacitor C1 of the seven-level inverter. The inductor, LD, and the power electronic switch, SD1, of the current-fed forward converter are in addition used in the boost converter.

Fig-2 demonstrates the operating circuit of the DC-DC power converter when SD1 is turned on. The solar cell array supply energy to the inductor LD. as soon as SD1 is turned off and SD2 is turned on, its operating circuit is shown in Fig-2. Consequently capacitor C1 is associated to capacitor C2 in parallel through the transformer, so the energy of inductor LD and the solar cell array charge capacitor C2 through DD3 and charge capacitor C1 throughout the transformer and DD1 during the off-state of SD1. Because capacitors C1 and C2 are charged in parallel by using the transformer, the voltage ratio of capacitors C1 and C2 is the same as the turn ratio (2:1) of the transformer.

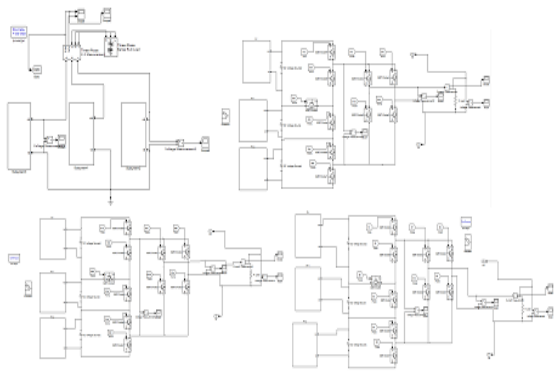

Fig 3: Matlab/simulink Models

Here mobile environments, self-localization is mostly achieved all the way through Global Navigation Satellite Systems, e.g., GPS, whose security can be making available by cryptographic and non cryptographic defense mechanisms. On the other hand, terrestrial extraordinary purpose infrastructure could be used along with method to deal with non honest beacons. We observe that this problem is orthogonal to the problem of NPV. In the rest of this paper, we will take for granted that devices employ one of the techniques above to securely conclude their own position and time reference.

IV. OPERATION OF SEVEN LEVEL INVERTER

As seen the seven-level inverter is collected of a capacitor selection circuit and a full-bridge power converter, which are associated in cascade. Operation of the seven-level inverter can be separated into the positive half cycle and the negative half cycle of the utility. While the voltages of both capacitors C1 and C2 in the capacitor selection circuit are stable and equivalent to Vdc/3 and 2Vdc/3, correspondingly. In view of the fact that the output current of the solar power generation system will be controlled to be sinusoidal and in phase with the utility voltage, the output current of the seven- level inverter is also positive in the positive half cycle of the utility. The operation of the seven-level inverter in the positive half cycle of the utility can be additional divided into four modes, as shown in Fig.4. The operation of the seven-level inverter in the Negative half cycle of the utility can be further separated into four modes, as shown in Fig.5.

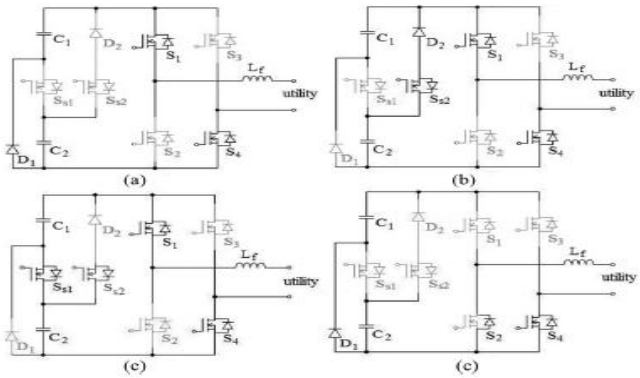

Fig: 4 Operation of the seven-level inverter in the positive half cycle,(a) mode 1, (b) mode 2, (c) mode 3, and (d) mode 4.

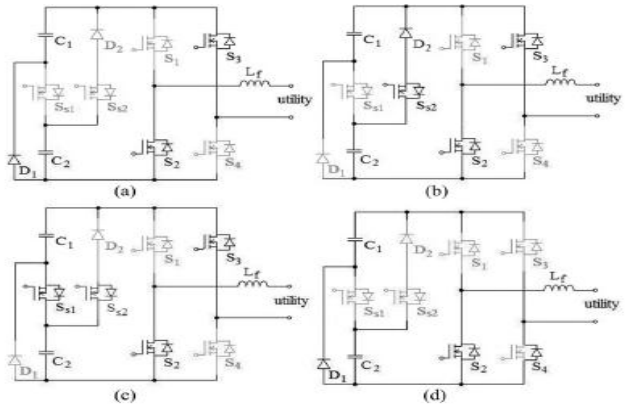

Fig: 5 Operation of the seven-level inverter in the negative half cycle:(a) mode 5, (b) mode 6, (c) mode 7, and (d) mode 8.

V. SIMULATION OUTPUT RESULTS

To make sure the presentation efficiency of the projected solar power generation system, a model was developed with a controller based on the DSP chip TMS320F28035. The power rating of the sample is 500W, and the model was used for a single-phase utility with 110V and 60Hz. Table -1 illustrates the main parameters of the model.

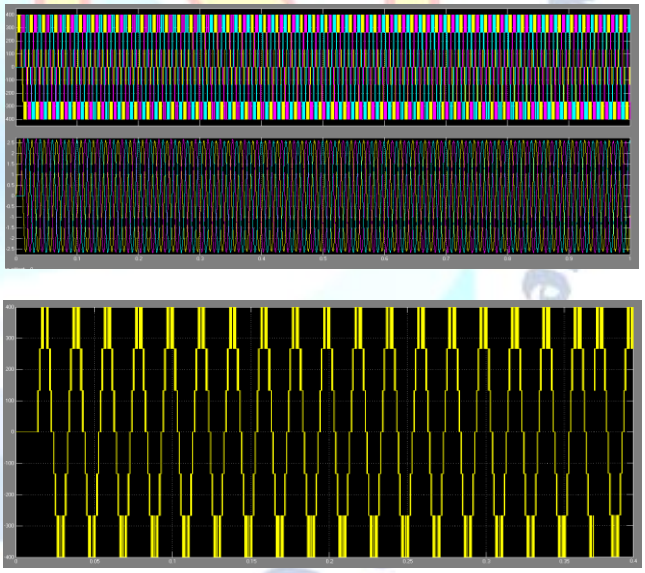

Fig 6: Voltage and current waveforms without LC filter

TABLE-1

DC-DC power converter	
input voltage	70V
inductor	1mH
PWM frequency	15360Hz
seven-level inverter	
capacitor C_1, C_2	1000µF
filter inductor	1.9 mH
PWM frequency	15360Hz

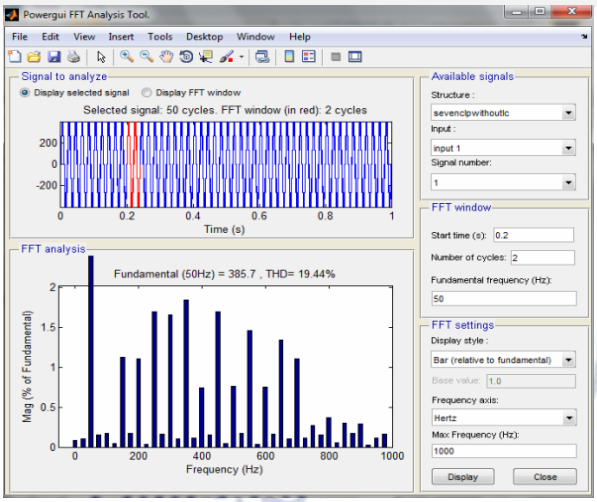

Fig 7: THD analysis 19.44% without LC filter

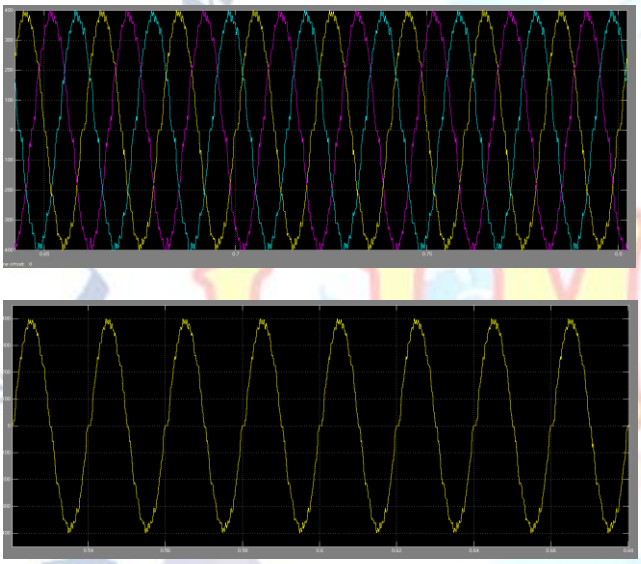

Fig 8: Voltage and current waveform using LC filter

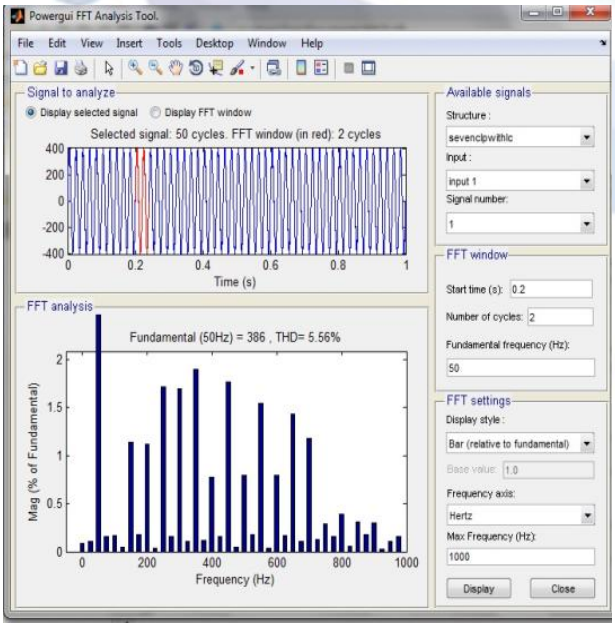

Fig 9: THD analysis 5.56% with LC filter

VI. Conclusion

Hence this projected work proposes a PV solar energy generation scheme to change the dc energy produced by a solar cell collection into ac energy that is fed into the function. The planned solar power development system is self-possessed of a dc–dc power converter and a seven level inverter. The seven-level inverters enclose only six power electronic switches, which make straightforward and easier the circuit arrangement. Moreover, only one power electronic switch is switched at elevated frequency at whichever time to produce the seven-level output voltage. This reduces the switching power failure and improves the control power effectiveness. The voltages of the two dc capacitors in the projected seven-level inverter are reasonably balanced automatically, so as a result the control circuit is basic. Investigational outcome illustrate that the projected solar power generation system produce a seven-level output voltage and outputs a sinusoidal current that is in segment with the function and service voltage, producing a power factor of unity. In accumulation, the designed solar power generation scheme can efficiently outline the utmost power of solar cell collection.

References

[1] R. A. Mastromauro, M. Liserre, and A. Dell'Aquila, Control issues in single-stage photovoltaic systems: MPPT, current and voltage control, IEEE Trans. Ind. Informat., vol. 8, no. 2, pp. 241–254, May 2012.

[2] Z. Zhao, M. Xu,Q. Chen, J. S. Jason Lai, andY. H. Cho, Derivation, analysis, and implementation of a boost–buck converter-based high-efficiency pv inverter IEEE Trans. Power Electron., vol. 27, no. 3, pp. 1304–1313, Mar 2012.

[3] M. Hanif, M. Basu, and K. Gaughan, Understanding the operation of a Z-source inverter for photovoltaic application with a design example IET Power Electron., vol. 4, no. 3, pp. 278–287 2011.

[4] J.-M. Shen, H. L. Jou, and J. C. Wu, Novel transformer-less gridconnected power converter with negative grounding for photovoltaic generation system IEEE Trans. Power Electron., vol. 27, no. 4, pp. 1818– 1829, Apr 2012.

[5] N. Mohan, T. M. Undeland, and W. P. Robbins, Power Electronics Converters, Applications and Design, Media Enhanced 3rd ed. New York, NY, USA: Wiley 2003.

[6] K. Hasegawa and H. Akagi, Low-modulation-index operation of a fivelevel diode-clamped pwminverter with a dc-voltage-balancing circuit for a motor drive IEEE Trans. Power Electron., vol. 27, no. 8, pp. 3495–3505, Aug 2012.

[7] E. Pouresmaeil, D. Montesinos-Miracle, and O. Gomis-Bellmunt, Control scheme of three-level NPC inverter for integration of renewable energy resources into AC grid IEEE Syst. J., vol. 6, no. 2, pp. 242–253, Jun 2012.

[8] S. Srikanthan and M. K. Mishra, "DC capacitor voltage equalization in neutral clamped inverters for DSTATCOM application," IEEE Trans. Ind. Electron., vol. 57, no. 8, pp. 2768–2775, Aug 2010.

[9] M. Chaves, E. Margato, J. F. Silva, and S. F. Pinto New approach in back-to-back m-level diodeclamped multilevel converter modelling and direct current bus voltages balancing IET power Electron., vol. 3, no. 4, pp. 578–589 2010.

[10] J. D. Barros, J. F. A. Silva, and E. G. A Jesus Fast-predictive optimal control of NPC multilevel converters IEEE Trans. Ind. Electron., vol. 60, no. 2, pp. 619–627, Feb 2013.

[11] A. K. Sadigh, S. H. Hosseini, M. Sabahi, and G. B. Gharehpetian Double flying capacitor multicell converter based on modified phase-shifted pulsewidth modulation IEEE Trans. Power Electron., vol. 25, no. 6, pp. 1517–1526, Jun 2010.

[12] S. Thielemans, A. Ruderman, B. Reznikov, and J. Melkebeek Improved natural balancing with modified phase-shifted PWM for single-leg fivelevel flying-capacitor converters IEEE Trans. Power Electron., vol. 27, no. 4, pp. 1658–1667, Apr. 2012.

[13] S. Choi and M. Saeedifard Capacitor voltage balancing of flying capacitor multilevel converters by space vector PWM IEEE Trans. Power Delivery, vol. 27, no. 3, pp. 1154–1161, Jul. 2012.

[14] L. Maharjan, T. Yamagishi, and H. Akagi Active-power control of individual converter cells for a battery energy storage system based on a multilevel cascade pwm converter IEEE Trans. Power Electron., vol. 27, no. 3, pp. 1099–1107, Mar 2012.

[15] X. She, A. Q. Huang, T. Zhao, and G. Wang Coupling effect reduction of a voltage-balancing controller in single-phase cascaded multilevel converters IEEE Trans. Power Electron., vol. 27, no. 8, pp. 3530–3543, Aug 2012.

[16] J. Chavarria, D. Biel, F. Guinjoan, C. Meza, and J. J. Negroni, Energybalance control of PV cascaded multilevel grid-connected inverters under level-shifted and phase-shifted PWMs IEEE Trans. Ind. Electron.,vol. 60, no. 1, pp. 98–111, Jan 2013.