International Journal for Modern Trends in Science and Technology
Volume: 03, Special Issue No: 02, March 2017
ISSN: 2455-3778
http://www.ijmtst.com

Reduction of Torque Ripple using 3-Level and 5-Level Inverter for Three Phase Induction Motor

A.V.G.A.Marthanda[1] | Dr.G.V.Marutheswar[2]

[1]Associate Professor, Department of EEE, Lakireddy Balireddy College of Engineering, Mylavaram, A.P, India.
[2,3,4]Department of EEE, S.V.University College of Engineering, Tirupathi, A.P, India.

To Cite this Article
A.V.G.A.Marthanda and Dr.G.V.Marutheswar, "Reduction of Torque Ripple using 3-Level and 5-Level Inverter for Three Phase Induction Motor", *International Journal for Modern Trends in Science and Technology*, Vol. 03, Special Issue 02, 2017, pp. 107-112.

ABSTRACT

In this paper, the multilevel inverter control structure assumes an indispensable part in the power business. It is simpler to create a power, voltage inverter with in multilevel structure. This strategy for multilevel inverter have a few favorable circumstances, for example, bring down aggregate THD, Electromagnetic impedance is lower, revised instruction of voltage appraisals of force semi conductor exchanging gadgets and yield voltage high .This two control topologies PWM techniques and its execution in 3, 5-level and 9-level full inverter sustaining a 3-stage acceptance engine. Analyzed aggregate symphonious bending estimations of V and I wave types of acceptance engine between various level.

Index Terms— *Cascaded inverter, Multilevel inverter, THD*

I. INTRODUCTION

Control gadgets converters, DC/AC PWM inverter have been amplifying their scope of utilization in industry since they gave decreased vitality utilization, better framework effectiveness ,and enhanced nature of creation ,Good upkeep et cetera. It should

- Lower switching frequency
- Lower switching losses.
- Good maintenance
- High Efficiency

As results, Multilevel power structure has been introduced as an alternative in high power and medium voltage situation[1].A multilevel converter not only achieves High power rating, Improves the performance of the whole system in terms of harmonics,dv/dt stresses, and stresses in the bearing of motor Servel multilevel inverter converter topologies have been also developed

- Diode clamped
- flying capacitors
- Cascaded or H-bridge.

Referring to the literature reviews, the cascaded multilevel inverter (CMI) with separated DC sources is clearly the most feasible topology for use as a power converter for medium & high power applications due to their modularization and extensibility [2].The H-bridge inverter eliminates the excessively large number of

- Bulky transformers required by conventional multilevel inverters
- clamping diodes required by multilevel diode-clamped inverters
- flying capacitors required by multilevel flying-capacitor inverter.

In this paper .A universal control scheme based on 3-level,5-level,9-level Cascaded inverter feeding a 3- induction motor presented. Advantage of using cascaded inverter is circuit lay out flexibility

Modulation topology proposed in this paper is Multicarrier Pulse Width Modulation, which is one of the primitive techniques and is used to suppress harmonics presented in the quasi-square wave. Only triangular carrier is considered in this paper.

II. Principal of the Proposed Method

The underneath digrams indicated a multi level because of neighboring vector little triangles are framed he beneath digrams determines a multilevel because of contiguous vectors little triangles are shaped are called areas. The shaded locales in Fig. 1 indicate two sub hexagons. They are spoken to as "sub hexagon I" (alluded as internal sub hexagon) having the vector 000 as the inside and "sub hexagon II" having the vector 330 as the middle. The internal sub hexagon can be seen as a space vector graph of a two-level inverter whose inverter voltage vectors switch between the lowermost levels. The shiffing of sub hexagon II in the space vector charts of a multilevel inverter of toward the zero vector 000 includes the mapping of the divisions of sub hexagon II to the voltage space vectors related with any sub hexagon By subtracting this vector at the focal point of the sub-hexagon, the reference space vector can be mapped.

III. Multilevel Inverter

A multilevel inverter diverse of arrangement of H-scaffold inverter units associated with 3-stage acceptance engine. The general capacity of this multilevel inverter is to combine a coveted voltage from a few DC sources. The AC terminal voltages of each scaffold are associated in arrangement. Not at all like the diode brace or flying capacitors inverter, the fell inverter does not require any voltage cinching diodes or voltage adjusting capacitors. This design is valuable consistent recurrence application, for example, dynamic front end rectifier, dynamic power Fliter, and responsive power compensation. The required conduction points can be computed by examining the yield stage voltage of course inverter accepting that four H-spans have been utilized, the yield voltage Vao can be given as: Vao = Va1 +Va2 +Va3 +Va4 +Va5… Since the wave is symmetrical along the x-hub, both Fourier coefficient A0 and An are zero. Simply the examination of Bn is required. It is given as:

Where

J=Number of dc source

N=Odd harmonics

It is necessary to select the harmonics with certain amplitude and order, which needs to be eliminated. [3],[4],[5] To eliminate 5th, 7th, and 11th harmonics and to provide the peak fundamental of the phase voltage equal to 80% of its maximum value, it needs to solve the following equation with modulation index

IV. 5- Level and 7- Level Inverter Circuits using only 2-Cascaded H- Bridges

There are a few sorts of multilevel inverter however the one considered in this paper is the fell multilevel inverter the structure of the CMI is straightforward and measured as well as requires minimal number of segments contrasted with different sorts of multilevel inverters. This thus, gives the adaptability in extending the CMI to higher number of levels without increment in circuit many-sided quality and in addition encourages bundling.

A.Single stage structure of a five level Cascaded Multilevel inverter

Every inverter level can produce three diverse voltage yields, +Vdc, 0, and–Vdc by interfacing the dc source to the air conditioner yield by various blends of the four switches, S11, S12,S13, and S14. To get +Vdc, switches S11 and S14are turned on, though –Vdc can be acquired by turning on switches S12 and S13. By turning on S11 and S12 or S13 and S14, the yield voltage is 0. The air conditioner yields of each of the distinctive full-connect inverter levels are associated in arrangement with the end goal that the blended voltage waveform is the whole of the inverter yields.

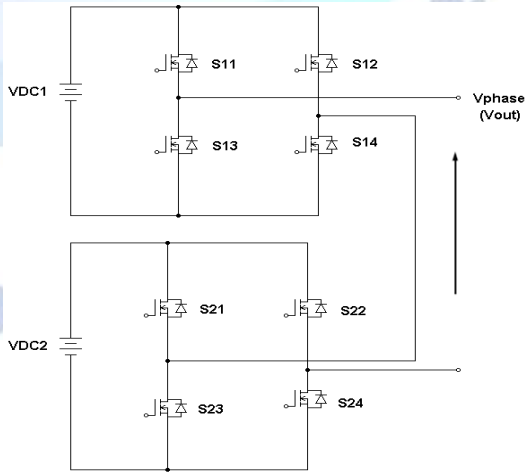

Fig. 1 Single Phase Structure of Cascaded Multilevel inverter

The structure appeared in Fig.1 is utilized to create Five Level Inverter yield voltage by giving same DC source esteem and Seven Level Inverter

yield voltagsby giving unequal DC source esteem. Here for Five Level yield 225V is given for both upper and lower H-connect and for Seven Level yield 150V and 300Vis given for upper and lower H-connect separately.

B. Three stage structure of Cascaded Multilevel Inverter

The Three Phase Structure of Cascaded Multilevel inverter is shown in Fig.2. Each dc source is associated with an inverter. Every inverter level can produce three diverse voltage yields, +Vdc, 0,and –Vdc utilizing different blends of the four switches. The air conditioner yields of the distinctive full bridge inverter levels are associated in arrangement with the end goal that the synthesized voltage waveform is the entirety of the inverter yields.

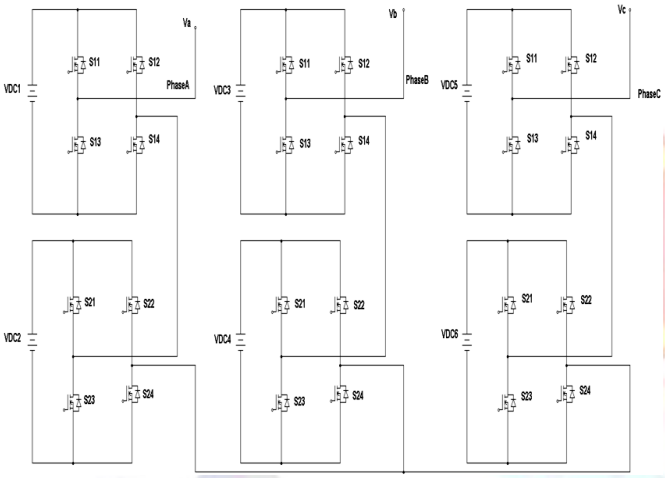

Fig. 2 Three Phase Structure of Cascaded Multilevel inverter.

V. Synchronous Motor Drive

The voltage in the stator ,E is corresponding to the result of slip recurrence and air crevice flux. The engine terminal voltage can be viewed as relative to the result of the recurrence and flux, if the stator voltage is ignored. Any lessening in the supply recurrence without an adjustment in the terminal voltage causes an expansion noticeable all around crevice flux. Enlistment engines are intended to work at the knee purpose of the polarization trademark to make full utilization of the attractive material. Hence the expansion in flux will immerse the engine. This will build the polarizing current, bend the line current and voltage, increment the center misfortune and the stator copper misfortune, and deliver a high pitch acoustic commotion.

While any expansion in flux past evaluated esteem is undesirable from the thought of immersion impacts, a reduction in flux is additionally kept away from to hold the torque ability of the engine. Subsequently, the variable recurrence control beneath the appraised recurrence is for the most part completed by decreasing the machine stage voltage, V, alongside the recurrence in such a way, to the point that the flux is looked after steady. Over the evaluated recurrence, the engine is worked at a consistent voltage on account of the constraint forced by stator protection or by supply voltage confinements.

VI. Simulation Model and Results

Multilevel inverter fed induction motor drive inverter is implemented in MATLAB SIMULINK which is shown in Fig.3. The MATLAB SIMULINK model of Single leg of five level Cascaded Multilevel inverter using two H-bridge configuration is shown inFig.4.

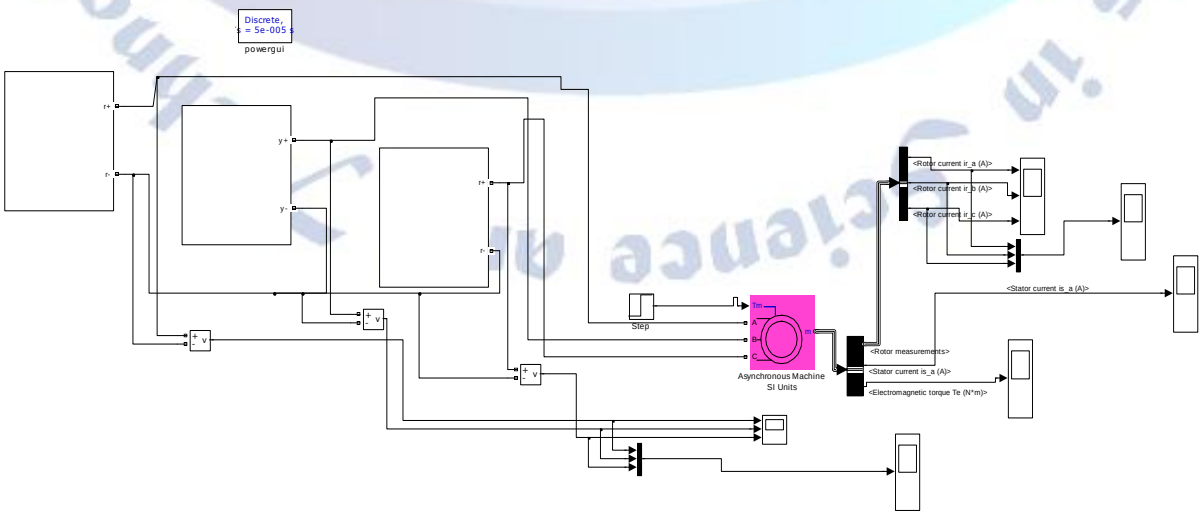

Fig. 3 Matlab/Simulink model of Multilevel Induction Motor drive.

The single phase five level inverter output isin Fig.5. The three phase five level inverter output phase voltage after feeding to induction motor is shown in Fig.6. The stator currents with respect to three phases are shown in Fig.7. The Variation in speed is shown in Fig.8. The speed increases and settles at 1470 rpm. The Torque is shown in Fig.9.FFT analysis is done for the voltage and current and the corresponding spectrum is shown in Fig.10 andFig.11 respectively. It can be seen that the magnitude of fundamental voltage for five level inverter fed induction motor drive is 222.4 Volts. The total harmonic distortion is 4.95 percent and the magnitude of fundamental current is 97.93 Amperes. The total harmonic distortion is 1.57 percent.

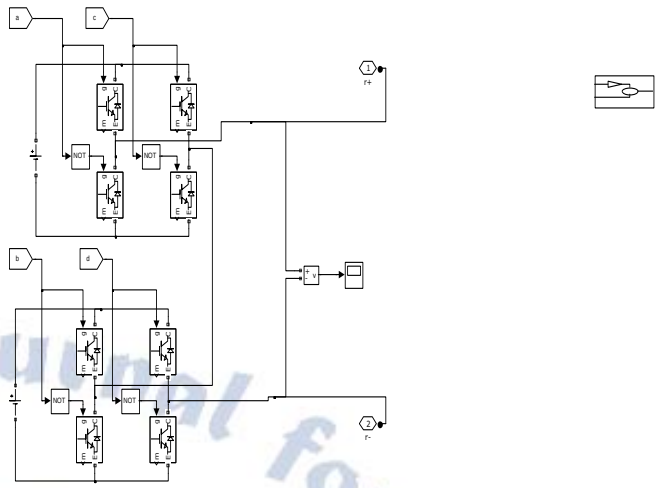

Fig. 4 Matlab/Simulink model of single leg of three phase Five level Multilevel Inverter.

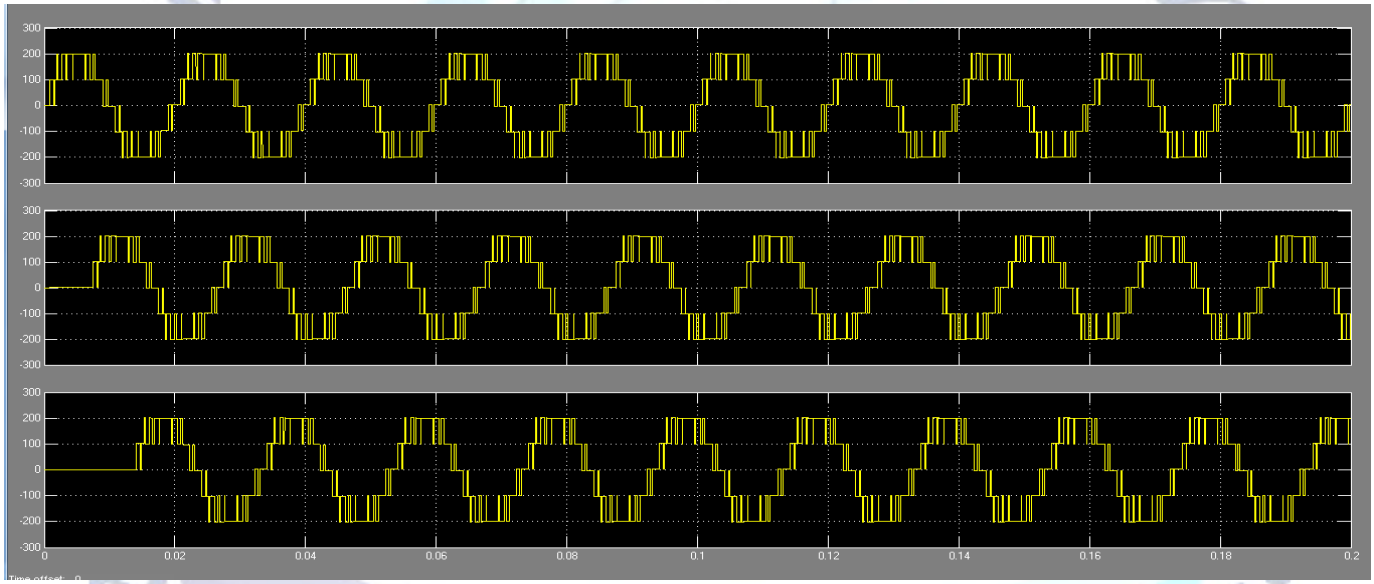

Fig: 5Three phase input voltage wave form

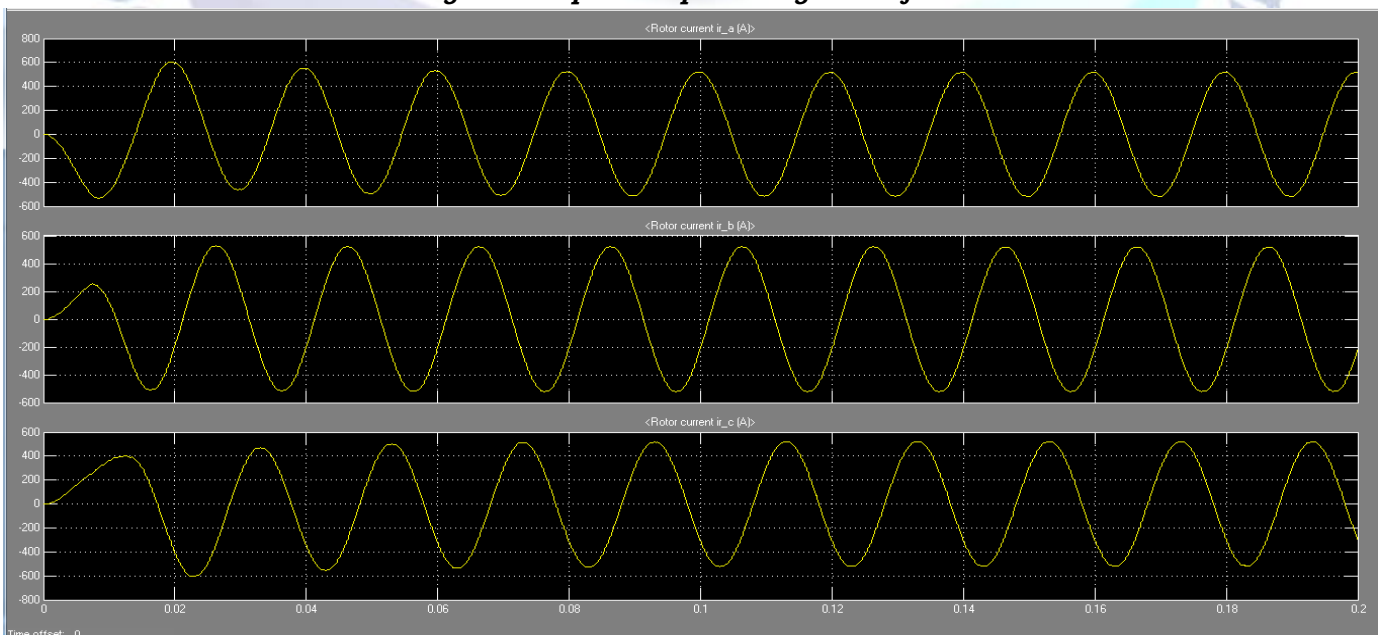

Fig: 6 Three phase output voltage wave form

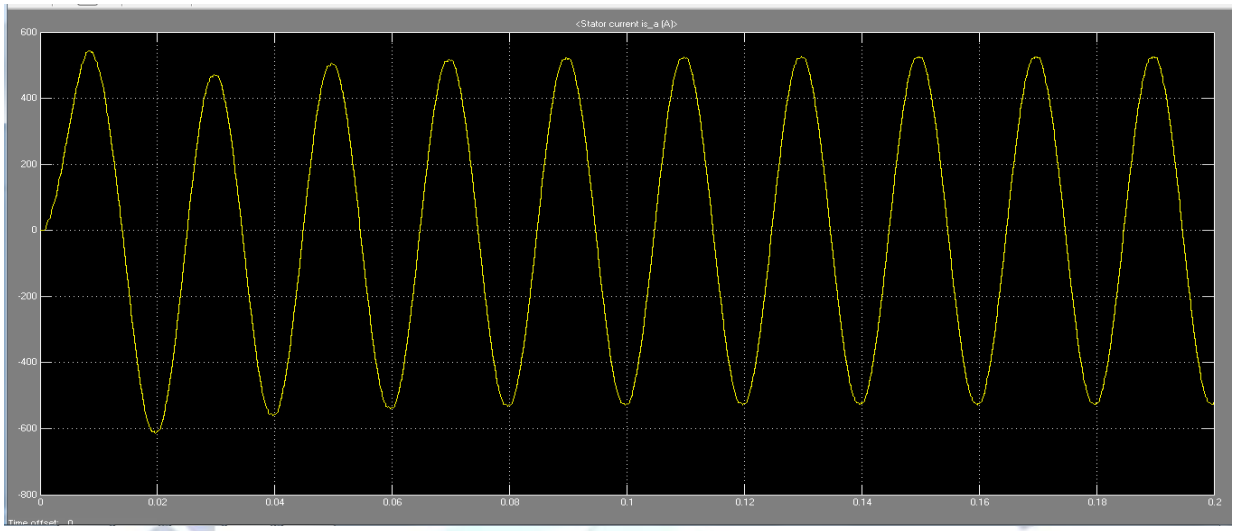

Fig: 7 Three phase output current wave form

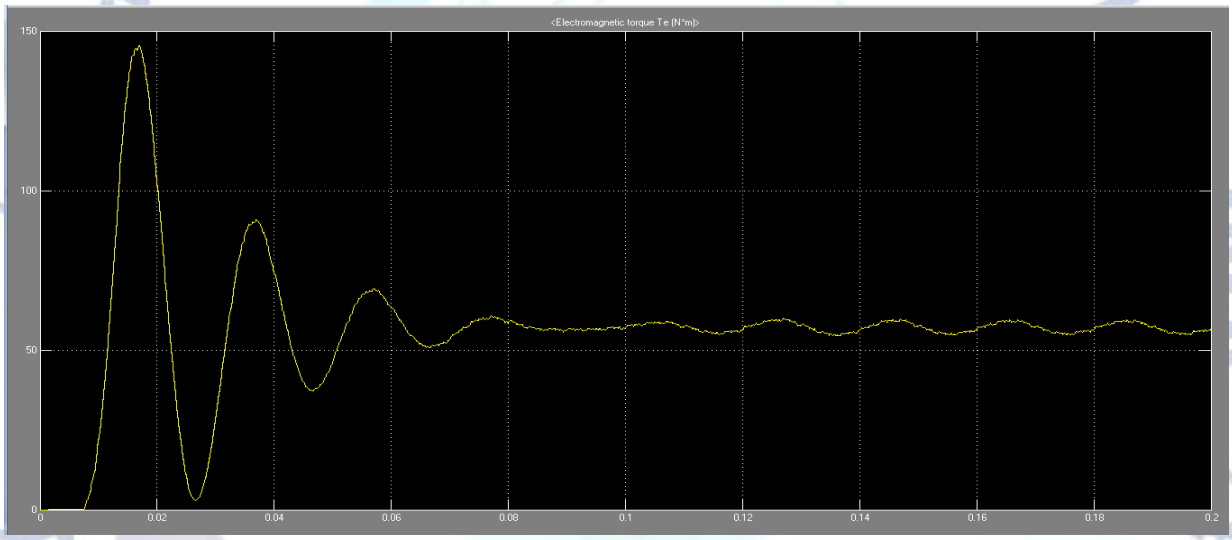

Fig: 8 Electromagnetic Torque

VII. Conclusion

Three level and five level inverter nourished acceptance engine drive are reenacted utilizing the squares of simulink. The consequences of three level and five level frameworks are looked at .it is watched that aggregate consonant contortion delivered by 7-level inverter framework is not as much as that of a 5-level inverter nourished enlistment engine drive framework . Along these lines the warming because of three level inverter framework is not as much as that of a five level inverter sustained drive framework. The reproduction aftereffects of voltage, current, speed and range are exhibited. The extent of this work is the demonstrating and recreation of 3,5 level inverter bolstered enlistment engine drive frameworks.

REFERENCES

[1] J. Rodríguez, J. S. Lai, F. Z. Peng, "Multilevel inverters: Asurvey of topologies, controls, and applications," IEEETransactions on Industrial Electronics, vol.49, no.4, pp.724-738, 2002.

[2] J. S. Lai, F. Z. Peng, "Multilevel converters-a new breedof power converters," IEEETransactions on IndustryApplications, vol. 32, no.3, pp. 509-517, 1996.

[3] L. M. Tolbert, F. Z. Peng, T. G. Habetler, "Multilevelconverters for large electric drives,"IEEE Transactions onIndustry Applications, vol. 35, no. 1, pp. 36–44, Jan./Feb.1999.

[4] N. Chiasson, L. M. Tolbert, K. J. McKenzie, Z. Du, "Acomplete solution to the harmonicelimination problem,"IEEE Transactions on Power Electronics, vol. 19, no. 2,pp. 491-499,2004.

[5] S.M Bashi, M. Mariun, N.F Mailah and S. Alhalali " LowHarmonics Single Phase Multilevel Power Converter"Asian journal of Scientific Research 1(3) 274-280 (2008)ISSN 1992-1454

[6] Mr. G. Pandian and Dr. S. Rama Reddy" Implementationof Multilevel Inverter-Fed Induction

Motor Drive" journalof industrial technology, volume 24 (2008)

[7] Emil Levi, Senior Member, IEEE "Multiphase ElectricMachines for Variable-Speed Applications" IEEETRANSACTIONS ON INDUSTRIAL ELECTRONICS,VOL. 55, NO. 5, MAY 2008 pgs-1893 -1909

[8] Rahul B Nagpure, S S gokhale " Carrier Pulse widthModulation for Three Phase Multilevel Inverter toMinimise THD and enhance the Performance of Inductionmotor" National Conference on Innovative Paradigms inEngineering & Technology (NCIPET-2012) Proceedingspublished by International Journal of ComputerApplications® (IJCA)

[9] A. V. Antony Albert , V. Rajasekaran, S. Selvaperumal"comHarmonic Elimination of H-Bridge Seven LevelInverter"European Journal of Scientific ResearchISSN1450-216X Vol.65 No.4 (2011), pp. 594-600.