International Journal for Modern Trends in Science and Technology
Volume: 03, Special Issue No: 02, March 2017
ISSN: 2455-3778
http://www.ijmtst.com

Arduino Based Two Axis Solar Tracking by Using Servo Mechanism

V.Brahmeswara Rao[1] | K.Durga Harish Kumar[2] | N.V.Upendra Kumar[3] | K.Deepak[4]

[1]Assistant Professor, Department of EEE, Andhra Loyola Institute of Engineering & Technology, Vijayawada, Andhra Pradesh, India.
[2,3,4]Department of EEE, Andhra Loyola Institute of Engineering & Technology, Vijayawada, Andhra Pradesh, India.

To Cite this Article
V.Brahmeswara Rao, K.Durga Harish Kumar, N.V.Upendra Kumar and K.Deepak, "Arduino Based Two Axis Solar Tracking by Using Servo Mechanism", *International Journal for Modern Trends in Science and Technology*, Vol. 03, Special Issue 02, 2017, pp. 41-44.

ABSTRACT

The variation in the solar energy occur daily due to variation in day night cycle and also because of seasonal variations through out the year. Population of the world is increasing very rapidly. From past decade of years the non renewable energy sources like coal and oil are extinguishing and so it become serious problem for providing he reliable energy to the world. But solar energy plays important source of primary energy. In this project we propose dual axis solar tracking system by which it is possible to catch maximum amount of solar energy by using Arduino as main processing unit.

KEYWORDS: *Dual axis solar tracker, Arduino, LDR Sensor, Servo motor.*

I. Introduction

In the present senerio the variation in the climatic changes have reached the critical level. The main reasons for climatic changes are due to natural causes and man-made destructions like global warming and green house gases are effecting the climatic conditions around the world.

In the past decade of years there is increase in demand for reliable and abundant electrical energy derived from renewable energy sources renewable energy plays important role in energy crisis of country. The government started to decrease the usage of conventional energy sources and encouraging people to use renewable energy sources like hydro and solar. One such example of renewable energy is solar power. Solar energy is a very large, inexhaustible souce of energy.The reason is sun is only source we can find anywhere it anywhere. The solar power received by the earth is approximately 1.8*1011MW.The system will tend maximize the amount of power Absorbed by Photo voltaic systems. It has been found that making the use of a Dual axis tracking system, over a fixed system, can increase the power output by 40% - 60%. Solar energy systems have emerged as a possible source of renewable energy over the past two or three decades, and are now utilized for a variety of household and industrial applications. Such systems are based on a solar collector, it designed to collect the sun's energy and to convert it into either electrical power or thermal energy. In general, the power developed in such applications depends upon the amount of solar energy captured by the collector, and thus the difficulty of developing tracking schemes capable of following the trajectory of the sun throughout the course of

the day on a year-round basis has received significant coverage in this project.

II. Solar Tracker

Solar tracker is a device which is used to collect the solar energy emitted by the sun. Solar tracking is Nothing but changing position of panel With respect to sun. usually photo voltaic module assembled in solar tracker is more powerful than critical irradiance in the fixed system. Solar trackers are classified on basis of performance, coast respectively. by tracking system we can catch 40-50% more efficiency compared to fixed panel. Among them dual axis provides increased efficiency of 48% as compared with single axis tracker. Advantage of Dual axis trackers are catcthing the position of the sun any where in the sky due to seasonal variations. The following figures represent solar tracking systems.

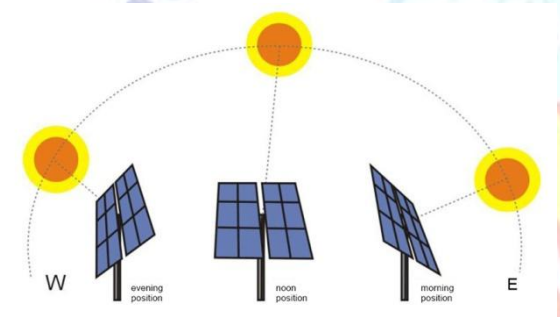

The main aim of this proposal is to implement high efficiency solar tracker.

III. HARDWARE REQUIREMENT

Since it is hard ware based project the main components are LIGHT DEPENDENT RESISTORS(LDR), Servo motors, Arduino as main controller.

A .Light Dependent Resistor(ldr)

Ldr are also named as photo conductors (or) photo resistors. Which works on the principal of photo conductivity. ldr resistance decrease with increase in light intensity and vice versa. Ldr s are mainly used for sensing purpose in order to catch the solar energy and provide analog input to arduino.

Light Dependent Resistor (LDR)

B .Servo motor

Servo motor is three wired dc motor which works on the principal of servo mechanism. servo motor can rotate upto maximum angle of 180degrees. In our proposed project 4.8V motor is used. Since it is dual axis system two sevo motors are used for east-west and north-south directions respectively. Servo motors are powerd by PWM output received from the arduino.

C .Solar panel

Solar energy is the photovoltaic cell which convert light energy received from sun into electrical energy. The name behind "solar" panel is they grab high powerful energy emitted from the sun. The solar panel finds its applications in street lights , domestic and industrial areas.

D .Arduino

Arduino is the type of microcontroller. The purpose of microcontroller is to control the position of motor. so *At mega 328p* microcontroller is used. Arduino consist of 6 analog inputs and 14 digital i/o ports out of them 6 acts as pwm signals. In addition to this it consist of 16 MHZcrystal oscillator, a USB cable through which program is dumped. And arduino get powerd by the power jack. Advantages of arduino is low cost, roubst construction and platform independent.

IV. IMPLEMENTATION

A . Block diagram

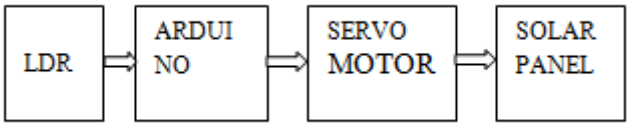

The principle of the solar tracking system is done by Light Dependant Resistor (LDR). Four LDR's are connected to Arduino analog pin AO to A4 that acts as the input for the system. The built-in Analog-to-Digital Converter will convert the analog value of LDR and convert it into digital. The inputs are from analog value of LDR, Arduino as the controller and the DC motor will be the output. LDR1 and LDR2, LDR3 and LDR4 are taken as pair .If one of the LDR in a pair gets more light intensity than the other, a difference will occur on node voltages sent to the respective Arduino channel to take necessary action. The DC motor will move the solar panel to the position of the high intensity LDR that was in the programming.

.

B. Circuit diagram

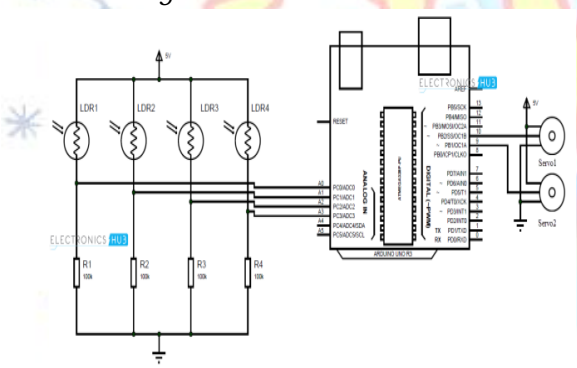

Figure: circuit representation

C. Algoritm

Step1: start the program.

Step2:initialize all the values.

Step3:calculate the difference of ldr.

Step4:if ldr1>>ldr 2,3,4,5servo motor go towards right

step5:if ldr2>>ldr 1,3,4,5servo motor go towards centre

step6:if ldr1>>ldr2,3,4,5 servo motor go towards right.

step7:if ldr1>>ldr2,3,4,5 servo motor go towards right.

step8:if ldr1>>ldr2,3,4,5 servo motor go towards right.

step9:End the program.

Flow Chart

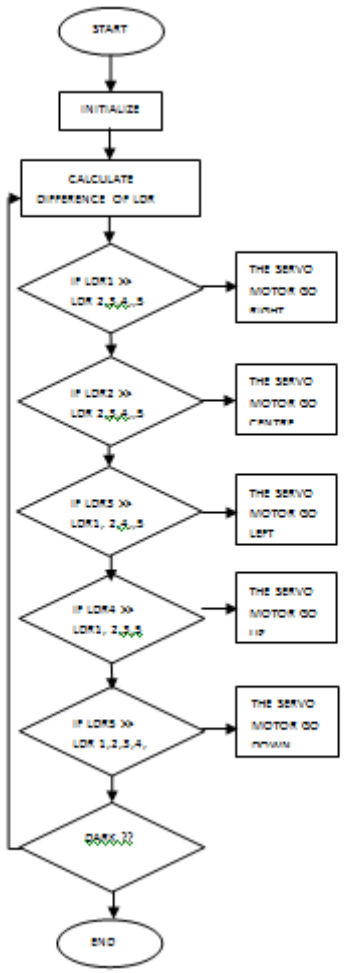

Flowchart representation

V. RESULTS

The following tables shows voltage drawn by solar panel with and without tracking respectively.

Time	Voltage without tracking	Voltage with tracking
11:00AM	4.955v	5.262v
12:00PM	3.467v	5.875v
1:00PM	3.447v	6.002v
2:00PM	3.447v	5.515v
3:00PM	3.15v	5.275
4:00PM	3.15v	5.015

TIME	Power Generated with tracing	POWER Generated Without Tracing
11:00AM	3.682watt	3.467watt
12:00PM	4.112watt	2.452watt
01:00PM	4.2watt	2.39watt
02:00PM	3.86watt	2.307watt
03:00PM	3.692watt	2.205watt
04:00PM	3.5watt	2.205watt

Table 2: power generated with and with out tracking

Graphical View of Voltage Drawn By Solar Tracking

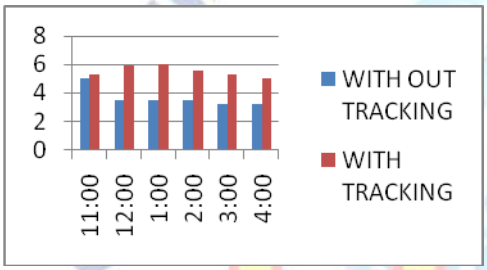

VI. EXPERIMENTAL SETUP

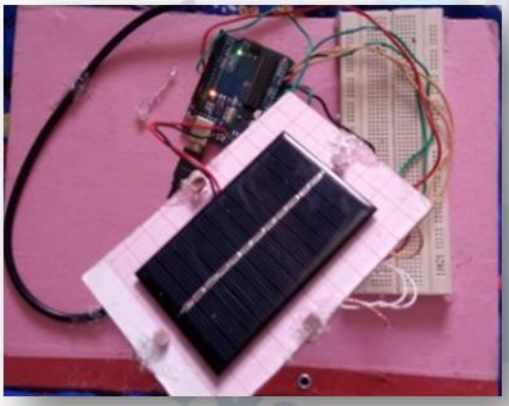

VII. CONCLUSION

The proposed dual axis solar tracker automatically tracks position of sun and maximise the solar power with help of arduino. As compared to single axis, dual-axis system provide high abundant electrical energy output when compared to the fixed mount system. The Dual axis tracker is having more efficiency. The main aim of this work is to develop two axis solar tracker system that uses four sensors(ldr s) to predict the sun position. Secondly, program is dumped on to Arduino (ATmega 328 p) so that rotation of servo motor can be controlled by employing the microcontroller. The programming part consists of 5 cases which has been stated and analyzed. Thirdly, to investigate the voltage differences from the sensor (light depending resistor LDR) based on intensity of light received by the sensor. The output has plotted into a graph and compared with static system. And proposed system is eco friendly, and widely used.

REFERENCES

[1] Berberi, P., S. Thodhorjani, P. Hoxha, and V. Muda. 2013. Photovoltaics: between a bright outlook and uncertainty. Energy Sci. Eng. 1:72–80.

[2] Chakraborty, S., P. K. Sadhu, and N. Pal. 2015. Technical mapping of solar PV for ISM- an approach

[3] M.D.Singh and Khanchandani: "Power Electronics

[4] www. arduino.cc

[5] C. Hua and C. Shen (1998) Comparative study of peak power " tracking techniques for solar storage system", Applied Power Electronics Conference and Exposition, vol. 2, pp. 679-685.

[6] Chin, C.S., Babu, A. and McBride, W. (2011) Design, Modeling and Testing of a Standalone Single Axis Active Solar Tracker Using MATLAB Renewable Energy, 36, 3075-3090.