International Journal for Modern Trends in Science and Technology
Volume: 02, Issue No: 12, December 2016
ISSN: 2455-3778
http://www.ijmtst.com

Modelling and Simulation of Perturbation and Observation MPPT Algorithm for Photovoltaic Applications

Anupam Mukherjee[1] | Subhajit Mondal[2] | Ayandeep Ganguly[3]

[1]Department of Chemical Engineering, HaldiaInstitute of Technology, Haldia, West Bengal, India
[2]Department of Electrical Engineering, HaldiaInstitute of Technology, Haldia, West Bengal, India
[3]Department of Electrical Engineering, HaldiaInstitute of Technology, Haldia, West Bengal, India

To Cite this Article
Anupam Mukherjee, Subhajit Mondal and Ayandeep Ganguly, "Modelling and Simulation of Perturbation and Observation MPPT Algorithm for Photovoltaic Applications", *International Journal for Modern Trends in Science and Technology*, Vol. 02, Issue 12, 2016, pp. 67-72.

ABSTRACT

Renewable energy has too much attention over past few years specially solar energy. Photovoltaic is a technique in which solar energy is converted into electrical energy (DC). As we know conventional energy is limited so we are trying to improve the uses of renewable energy like solar energy, hydel energy, and tidal energy. A single cell of photovoltaic has still very low output so it is necessary to improve the performance and reduce the cost. The model of photovoltaic presented in this paper can be used to visualize its output characteristics which are I-V characteristics and P-V characteristics under different irradiation level and temperature. In this paper MPPT- Maximum power point tracking is a method in which changing the ratio between current and voltage delivered to get power by tracking one maximum power point from array input. Here the system developed by combining (PV) photovoltaic module and DC-DC boost converter. There is a detail discussion of DC-DC boost converter and perturbation and observation (P&O) MPPT algorithm. Perturbation and observation (P&O) principal is to create a perturbation by increasing or decreasing the duty cycle of DC-DC boost converter and observe the change in PV output. Used algorithm is to track MPPs because it performance very small control under rapid changes. This is experimentally verified by modelling the PV system with MPPT algorithm in MATLAB/Simulink Software.

KEYWORDS: *Modeling Photovoltaic cell, MPPT, DC-DC boost converter, P&O, Simulation, Matlab/Simulink.*

I. INTRODUCTION

Photovoltaic has experienced large amount of growth and brought attention over past few years. This PV-Photovoltaic module converts solar energy to electrical energy.

The amount of electrical energy which is generated by the photovoltaic module depends on the amount of solar radiation and temperature. Since a single cell of photovoltaic module generates small amount of electrical energy so there terminals can be feed to small loads [1] [2] [3] [4] [5] [6] [7].Among all the renewable energy present solar energy is most essential and prerequisite renewable resource because it is the only renewable energy which does not harm environment and uses sustainably solar radiation energy.

PV is a semiconductor device which is static, quite, has little operation and maintenance cost. The output characteristic of a photovoltaic module depends on the irradiance and cell temperature and output voltage of PV module [21].PV module has non-linear characteristics so it is important to model it for simulation of maximum power point tracking MPPT for PV uses [8]. MPPT-Maximum

power point tracking is a method or an algorithm to obtain the maximum output. We have used DC-DC boost converter which will step up the input voltage to required output voltage in DC without using transformer. The main component of DC-DC boost converter is an inductor, capacitor, operational amplifier, MOSFET, diode, resister [9] [10].

PV module has major problem conversion efficiency of electrical power generated is very low about 9-17%, under low irradiation. Due to change in weather conditions the generated electrical power by solar module will also change. As irradiation and temperature changes the output characteristic also changes of solar module. Due to module such a low output there is a unique point solar on P-V characteristics and I-V characteristics which is also known as MPP-Maximum power point at which entire PV module will operate in its maximum efficiency and produces maximum output power [11].All algorithm of MPPT are of same aim to increase the output power of PV module.

II. Modeling of Photovoltaic Cell

A photovoltaic cell is basically a p-n junction fabricated over thin wafer of semiconductor. The radiation of solar energy gets directly converted into electrical energy this effect is called photovoltaic effect. When solar cell is exposed into sunlight the photons with greater energy then the band gap energy will create some electron hole pair which is proportional to incident irradiation.

Vpv= Output voltage of a PV module (V)
Ipv =PV module output current (A)
K= Boltzman's constant= 1.3805 * 10^{-23} J/K
T=Operating temperature (Kelvin)
Tr =Reference temperature=298K
Q=Electronic charge=1.6*10^{-19} C
Λ is the PV module illumination (W/m^2)
N_s=Number of cell connected in series
N_p=Number of cell connected in parallel
A=B= Ideality factor=1.6
I_{sCr}=0.0017A/degC
I_o=PV module saturated current(A)
Ki= Short circuit current temperature co-efficient
Rs=Series resistance of a PV module [12].

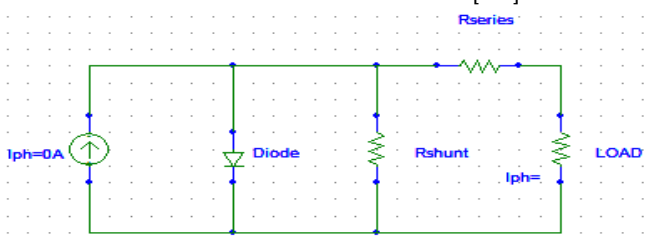

Fig. 1PV Cell using Diode Cell

The PV module which is used here in modelled using some of the mathematical equations.

Module photo-current:

$$I_{Ph} = [K_i \times (T - 298) + I_{sCr}] \times \lambda / 1000 \quad (1)$$

Modules reverse saturation current:

$$I_{rs} = I_{sCr} / [\exp(qV_{oc} / N_c KAT) - 1] \quad (2)$$

Module saturation current I_o:

$$I_o = I_{rs}[T / T_r]^3 \exp[qE_{go} / Bk\{1/T_r - 1/T\}] \quad (3)$$

(I_0 will change with temperature of cell)

Current output of the PV module (where V_{pv}=V_{oc}, N_p=1, N_s=36):

$$I_{pv} = N_p I_{ph} - N_p I_0 [\exp\{[q(V_{pv} + I_{pv} R_s)] / N_s KAT\} - 1] \quad (4)$$

[13] [14].

The final model of PV takes input as radiance, operating temperature in Celsius and voltage module and gives the output current Ipv and output voltage Vpv (Fig 2). Mat-lab code for plotting the graph voltage of PV and current of PV and the graph between voltage of PV and power of PV is plot (Vpv, Ipv) and plot (Vpv, Ppv) (Fig 3 and Fig 4 respectively).

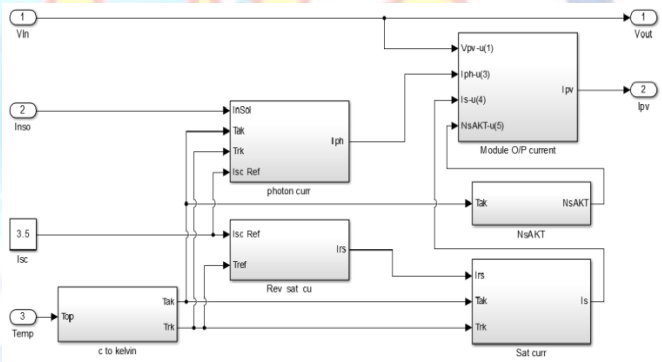

Fig. 2 PV Module in Matlab/Simulink

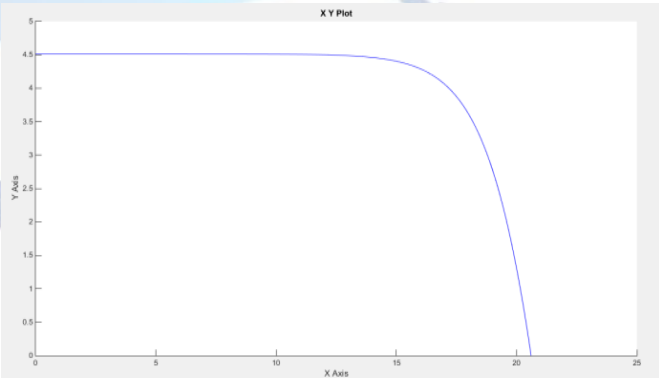

Fig.3 TheOutput Characteristics of PV where X-axis = Vout and Y-axis = Ipv IV Characteristics

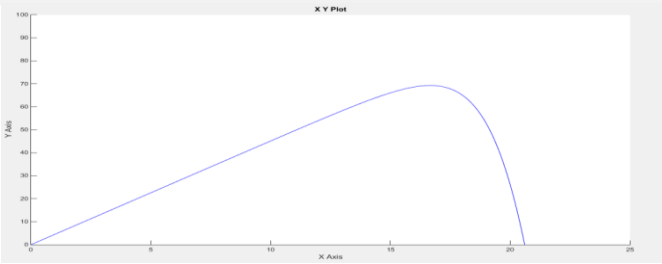

Fig. 4 The output characteristics of PV where X-axis = Module power (Ppv) and Y-axis = Module voltage (Vpv) PV characteristics

III. DC-DC Boost Converter

Basically boost converter is DC/DC converter which will boost to maintain the maximum output power for all the conditionsofirraduations and temperature variations. DC-DC boost converter (Chopper circuit) are used in grid connected applications to step up the module voltage.

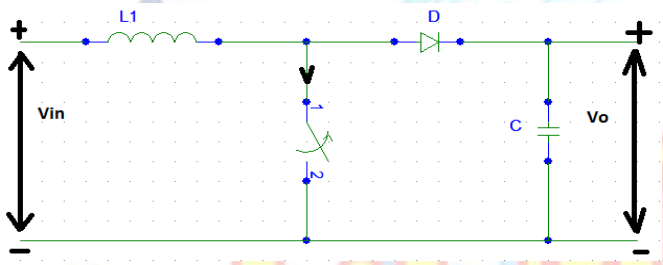

Fig. 5 DC-DC Boost Topology

When the switch which is parallel to capacitor is ON, the current build inthe inductor L due to positive inductor voltage is equal to input voltage. When this switch is OFF the voltage across the inductor reverses and add the input voltage and makes the outpur voltage greater than input voltage. The avarage voltage across the inductor over a full period is zero. The output voltage of the boost converter depends compeletly upon the duty cycle of the controlling switch. Thus we can calculate duty cycle (D) by using this formal [15].

$$V_o / V_{in} = [1/(1-D)] \quad (5)$$

IV. MPPT – Maximum Power Point Track

As we know the solar module has very low efficiency, so in order to increase the efficiency of the solar module this method is used to match the source and proper load. Mainly this tecnique is used to obtain the maximum power as from varying input or source. The MPPT operates by incrementing terminal voltage periodically of PV module and continuously seek. To calculate the maximum PV module output power and PV module terminal voltage the irradiance and temperature. The control system adjust the DC-DC boost converter to seek the maximum power point of PV module. the IV curve of PV module is non linear so it is difficult to power up the a certain load. This is done using DC-DC Boost Converter whose Duty cycle is varied by using MPPT algorithm [16].

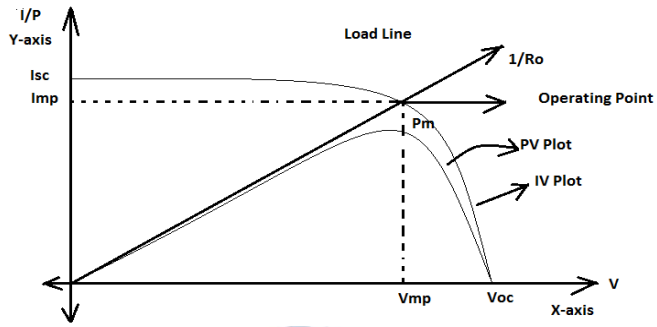

Fig. 6 MPP –Maximum Power Point

The point in the plot where Imp and Vmp meets is the Maximum Power Point. This is point in the plot where maximum power is available.

There are many methods used for maximum power point tracking which are:

1) Perturbation and Observation Method
2) Incremental Conductance Method
3) Constant Voltage Method
4) Constant Current Method

[17].

There will be comparison between the terminals voltages (actual and optimum) will control the duty cycle of boost converter. Changing the duty cycle according to error signals between maximum and actual power will pass maximum power available form PV module to connected loads.

A comparison between actual and reference values for PV module terminal voltage and maximum power available from PV module will control the duty cycle of boost converter. The different methods mentioned above have different algorithm which helps to track the peak power point of the PV module [18].

V. Perturbation And Observation (P&O) Algorithm And Simulation

In this method, due to perturbation the power of the PV module changes. When then peak power is reached the power at its next instant decreases and then after perturbation reverses. When the steady state reaches the algorithm around the peak point of the plot of PV module. To keep power variation very small perturbation is kept in the plot [19].

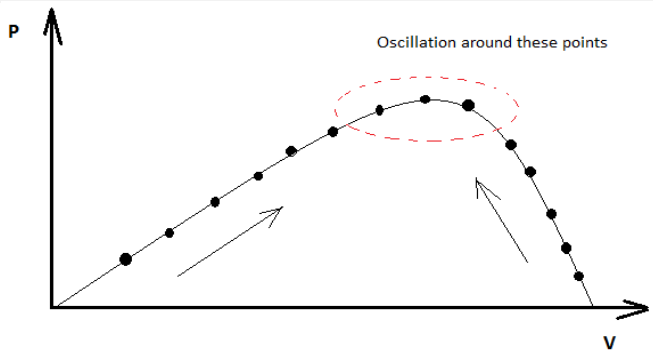

Fig. 7 Perturbation and Observation Algorithm

The algorithm read the data of voltage and current from the PV module. The power is calculated of PV module from the measured voltage and current. The value of power and voltage at n^{th} instant stored. The next value at $(n+1)^{th}$ instant are measured again and power is calculated from the measured value. The power and voltage at $(n+1)^{th}$ instant are subtracted with the values from n^{th} instant. In the PV power voltage curve if we see right hand side of curve where the voltage is almost constant the slope of voltage power is negative where in the left hand side the slope of voltage power id positive. The right side of the curve is for lower duty cycle nearly zero where the left side curve is for higher duty cycle nearly to unity. Here the algorithms decide to increase or decrease duty cycle [20].

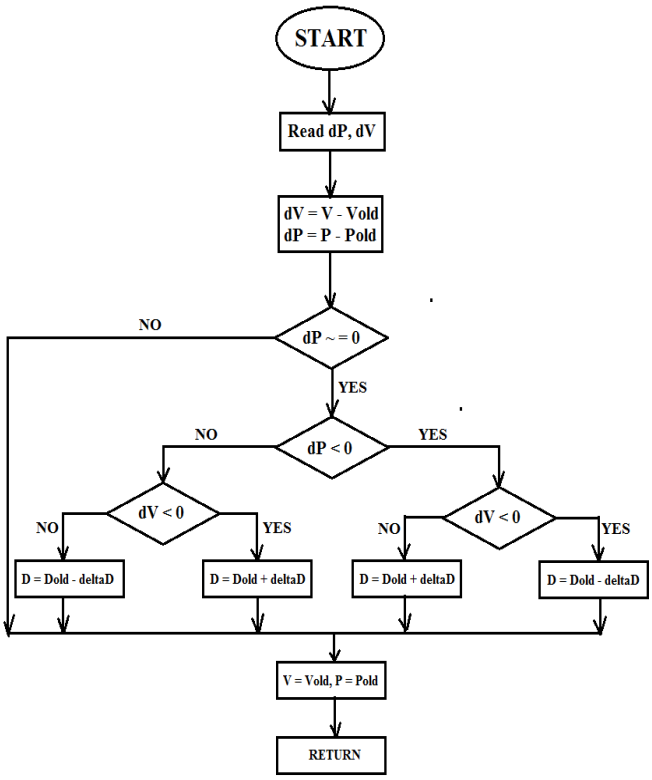

Fig. 8 Algorithm for Perturbation and Observation MPPT Method

Perturbation and observation method may also fail under rapidly changing condition of irradiance, temperature and atmospheric condition.

VI. Model Structure And Simulation Of MPPT Perturbation And Observation

In the process of simulation we have assumed irradiance and temperature as 1000 W/m² and 25℃. Taking simulation speed and accuracy into consideration we choose solver as ode45 (Dormand-Prince). The maximum step size is 1e-6, minimum step size is auto and relative tolarance is 1e-3 in configuration parameters in MATLAB. Here PV module is desinged using Subsystem whose output is connected DC-DC boost converter which consist of filter capacitor, resistor and diode.

The output feeders of the PV module is connected to the MPPT algorithm of P&O. The output of MPPT is connected to PWM generator (DC-DC)(Pulse Width Modulation Generator). It is very improtant to note that the PI controller is tuned for the purpose of stabilising of closed loop transfer function over the range of irradiation level. The controller parameters of PI controller is obtained by tuning in continuous time domain as Proportional(P)= 1.08 and Integral(I)= 0.6. The compensator formula is P+I(1/s).

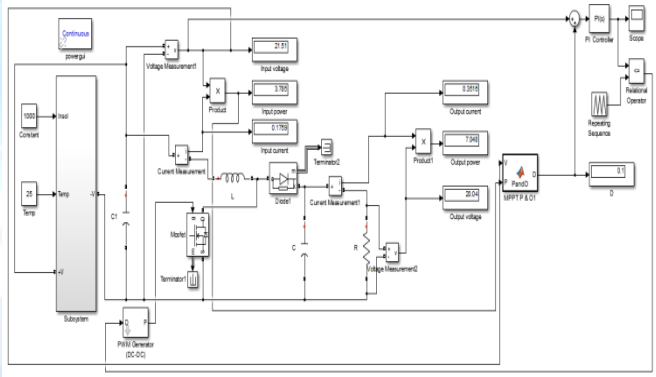

Fig. 9 Simulink Model of P&O MPPT for PV Applications

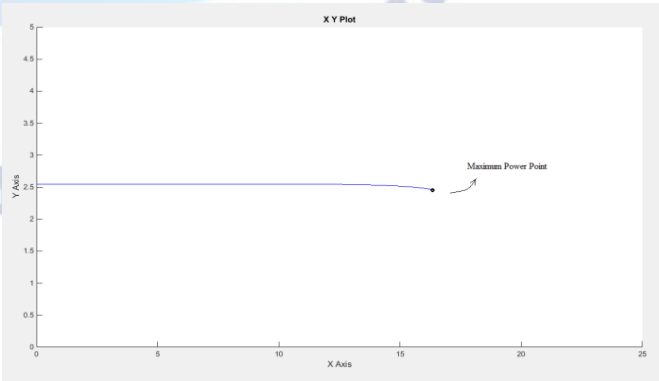

Fig. 10 IV Characterstics X-axis Vout and Y-axis Ipv Maximum Power Point

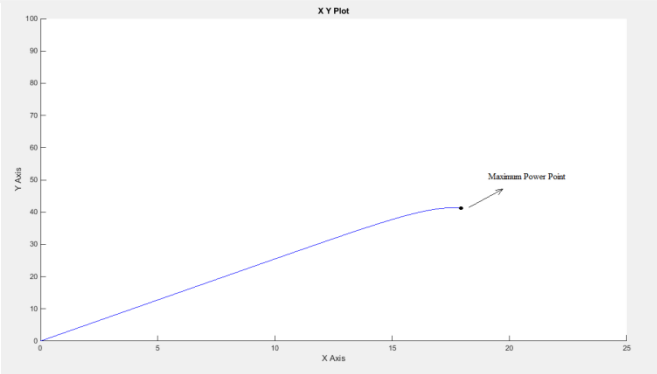

Fig. 11 PV Characterstics X-axis Ppv and Y-axis Vpv Maximum Power Point

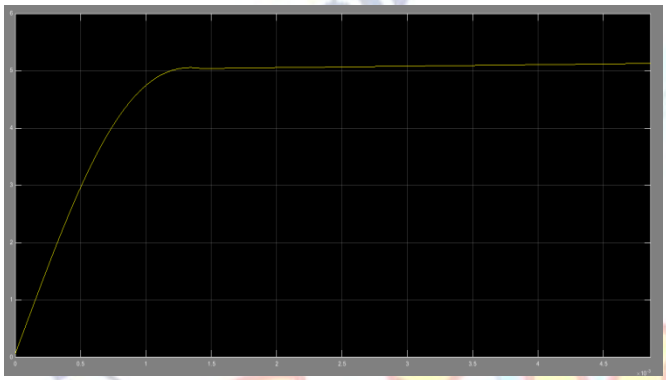

Fig. 12 PV Output Characterstics of MPPT P&O after PI Tunning

VII. Conclusion

The paper proposes the designing of photovoltaic module, simple DC-DC boost converter and algorithm of MPPT perturbation and observation (P&O). The output of PV module changes with the level of irradiation and temperature and other atmospheric conditions. PV module terminals are feeded to DC-DC boost converter which is used to step-up the output voltage.

This method of maximum power point tracking specially perturbation and obserbation (P&O) are used in photovoltaic system because of its easily to implement and for simplicity.

P&O method moves the operating point towards the maximum power point. This paper aims to design and implement the MPPT method and to achieve maximum output.

References

[1] SamerAlsadi, BasimAlsayid, "Maximum Power Point Tracking Simulation for Photovoltaic Systems Using Perturb and Observe Algorithm," December 2012, International Journal of Engineering and Innovative Technology (IJEIT)

[2] R.Faranda, S.Leva and V.Maugeri, "MPPT techniques for PV systems: energetic and cost comparison," Electrical Engineering Department of Politecnico di Milano, Piazza Leonardo da Vinci. Milano, Italy. IEEE 2008.

[3] M. E. Ahmed, and S. Mekhilef, "Design and Implementation of a Multi Level Three-Phase Inverter with Less Switches and Low Output,".

[4] S. Mekhilef, A. M. Omar, and N. A. Rahim, "Modeling of three-phase uniform symmetrical sampling digital PWM for power converter," IEEE Transactions on Industrial Electronics, vol. 54, pp .427-432, February 2007.

[5] S. Mekhilef, R. Saidur, and A. Safari, "A review on solar energy use in industries," Renewable and Sustainable Energy Reviews, Elsevier, vol. 15, pp. 1777-1790, May 2011.

[6] K.H. Hussein, I. Muta, T.Hoshino, M. Osakada, "Maximum photovoltaic power tracking: an algorithm for rapidly changing atmospheric conditions," IEE Proc.-Gener, transm. Distrib vol.142, NO.1, January 1995.pp.59~64.

[7] ChihchiangHua and ChihmingShen, "Study of maximum power tracking techniques and control of DC/DC converters for Photovoltaic Power System," IEEE 1998, pp.86~93.

[8] M.Veerachary,"Power Tracking for Nonlinear PV Sources with Coupled Inductor SEPIC Converter," IEEE Transactions on Aerospace and Electronic Systems, vol. 41, No. 3, July 2005.

[9] ArunKumarVerma, Bhim Singh and S.C Kaushik, " An Isolated Solar Power Generation using Boost Converter and Boost Inverter," in Proc. National Conference on Recent Advances in Computational Technique in Electrical Engineering, SLITE, Longowal (India), 19-20 March, 2010, paper 3011, pp.1-8.

[10] AthimulamKalirasu, SubharensuSekar Dash, "Simulation of Closed Loop Controlled Boost Converter for Solar Installation", Serbian Journal of Electrical Engineering Vol. 7, No. 1, May 2010, 121-130.

[11] D.P Hohm and M.E. Ropp, ―Comparative study of maximum power point tracking algorithms‖, Progress in Photovoltaic: Research and Applications, 2003, 11:47-62.

[12] N. Pandiarajan and RanganathMuthu, Mathematical Modeling of Photovoltaic Module with Simulink, 3-5 Jan 2011, ICEES 2011.

[13] S.Chowdhury, S.P.Chowdhury, G.A.Taylor, and Y.H.Song, Mathematical Modeling and Performance Evaluation of a Stand-Alone Polycrystalline PV Plant with MPPT Facility," IEEE Power and Energy Society General Meeting - Conversion and Delivery of Electrical Energy in the 21st Century, July 20-24, 2008, Pittsburg, USA.

[14] S. Nema, R.K.Nema, and G.Agnihotri, "Matlab / simulink based study of photovoltaic cells / modules / array and their experimental verification," International Journal of Energy and Environment, pp.487- 500, Volume 1, Issue 3, 2010

[15] Sheik Mohammed Sulthan, D. Devaraj, Simulation and Analysis of Stand-alone Photovoltaic System with Boost Converter using MATLAB/Simulink, MARCH 2014.

[16] R. Sridhar, Dr.Jeevananathan, N. ThamizhSelvan, Saikat Banerjee ,"Modeling of PV Array and Performance Enhancement by MPPT Algorithm".International Journal of Computer Applications (0975 – 8887) Volume 7– No.5, September 2010.

[17] Jay Patel1, Vishal sheth2, Gaurang Sharma3, DESIGN & SIMULATION OF PHOTO-VOLTAIC SYSTEM USING INCREMENTAL MPPT ALGORITHM, May 2013, ISSN (Online): 2278 – 8875.

[18] Vaddi Ramesh*, P Anjappa**, P.Dhanamjaya***, Simulation and Implementation of Incremental Conductance MPPT with Direct Control Method Using Boost Converter, IJESIT, November 2013, ISSN: 2319-5967.

[19] Pandiarajan N., Ramaprabha R., RanganathMuthu, ―Application of circuit model for photovoltaic energy conversion systems‖, research article.

[20] Vikrant A. Chaudhari, ―Automatic peak power tracker for solar pv modules using dspace software‖, Master thesis.,Maulana Azad National Institute of Technology, Deemed University,2005.

[21] DebarghyaHalder, SubhajitMondal, Anupam Mukherjee, AvijitGhosh, "An overview on the treatment of waste water using renewable energy," International Journal of Research in Engineering and Technology, vol.05, pp. 78-83, January 2016.