Gesture Vocalizer

R.L.R. Lokesh Babu[1] | S. Gagana Priyanka[2] | P.Pooja Pravallika[3] | Ch. Prathyusha[4]

[1]Assistant Professor, Department of ECE, Ramachandra College of Engineering, Eluru, India.
[2,3,4]B.Tech, Students, Department of ECE, Ramachandra College of Engineering, Eluru, India.

ABSTRACT

Generally dumb people use sign language for communication but they find difficulty in communicating with others who don't understand sign language. This project aims to lower this barrier in communication. It is based on the need of developing an electronic device that can translate sign language into speech in order to make the communication take place between the mute communities with the general public possible. A Wireless data gloves is used which is normal cloth driving gloves fitted with flex sensors along the length of each finger and the thumb.

Mute people can use the gloves to perform hand gesture and it will be converted into speech so that normal people can understand their expression. Sign language is the language used by mute people and it is a communication skill that uses gestures instead of sound to convey meaning simultaneously combining hand shapes, orientations and movement of the hands, arms or body and facial expressions to express fluidly a speaker's thoughts. Signs are used to communicate words and sentences to audience.

KEYWORDS: *Gestures, Arduino UNO, Flex sensors, APR 9600.*

I. Introduction

A single standard, universally accepted scheme does not exist for Sign Language. When India ratified the United Nations Convention on the Rights of Persons with Disabilities (UNCRPD), India made a promise to the world that she would ensure that dumb and deaf people will be treated equally and will enjoy the same rights as other Indian citizens. But the absence of such a common sign language model proves to be a roadblock in the efforts to treat the Deaf and speech impaired people equally. It was the above factors which prompted to address this key issue through this project. Thus, was conceptualized the Gesture Vocalizer. Gesture Vocalizer is a microcontroller or Arduino based system that makes use of flex sensors and an accelerometer for detecting the finger bend angles and the tilt detection respectively. The said values that correspond to a particular gesture are then played as a voice message as well as text on the LCD screen display. So, that we come on conclusion to make a simple prototype by taking some of those gestures and convert it into audio and visual form so that they can understand by everyone. For that we are making use of Arduino UNO Board as Atmega 328 Controller board to interface all of the sensors and actuators.

Basically an Artificial Network is the concept of our prototype. Some sensors are placed on the hand of deaf people which converts the parameter like finger bend hand position angle into electrical signal and provide it to Atmega 328 controller and controller take action according to the sign.

Aim of the Project

Sign language is the language used by deaf and mute people and it is a communication skill that uses gestures instead of sound to convey meaning simultaneously combining hand shapes, orientations and movement of the hands, arms or body and facial expressions to express fluidly a speaker's thoughts. Signs are used to communicate words and sentences to audience. A gesture in a sign language is a particular

movement of the hands with a specific shape made out of them. A sign language usually provides sign for whole words. It can also provide sign for letters to perform words that don't have corresponding sign in that sign language. In this project Flex Sensor Plays the major role, Flex sensors are sensors that change in resistance depending on the amount of bend on the sensor.

II. Motivation of the Project

Generally each and every human being need communication in conveying their ideas, sharing their views and thoughts. But in the case of deaf, dumb and the people who are paralyzed it became a great difficulty to them to convey their words. Hence Gesture Vocalizer is a device designed to communicate with deaf and dumb communities and their communication with the normal people. So that we came to a conclusion to make a simple prototype by taking some of those gestures and convert them into audio and video form so that they can be understand by each and everyone.

All these problems faced by the deaf and dumb people can be rectified by using our project in which some sample voice messages are recorded and these messages were conveyed through speaker when gestures were given by the people.

Scope of the Project

Daily we used to see many deaf and dumb people suffering a lot to communicate their views with the people near them, the sign language made by the affected people cannot be understood by us and they cannot recognize our language. Hence in our project we connect flex sensors to the glouse wore by the people when these flex sensors are bended along with the length the resistance changes and hence it hits the memory where the voice message recorded by us is stored and the message is conveyed through speaker. Based on Arduino we did this project. By using this project we can reduce the difficulties faced by the deaf, dumb and physically paralyzed people.

III. Proposed System

Many works were done before for solving this problem, but it became difficulty in sensing the gestures exactly. In past Electronic speaking system was designed for deaf and dumb people by using potentiometer and using micro controllers. In our project we used flex sensors which were more sensitive and hence respond quickly to minute variation in the length of the sensor. We designed it using Arduino UNO in which we can easily dump and restore our code.

Working of Proposed System

The Arduino UNO will take the instructions given by the flex sensors and process it to the voice module APR 9600 from which the instruction is heard from speaker.

In this project flex sensors are attached to the fingers of the gloves and the deaf, dumb people when they want to convey message make signs. When they do gestures the flex sensors bend and according to the principle of the flex sensors the resistance of the sensors varies and thus hit the memory location where the message is stored from that the message is audible for us through the speaker.

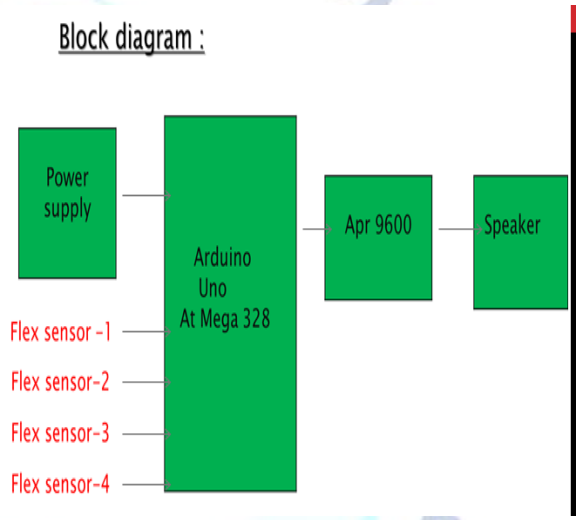

IV. Implementation of the of Hardware

Components Required

The implementation of the proposed system consists of following components

1) Flex sensors
2) Arduino UNO
3) APR 9600
4) Speaker
5) Power supply

A. Flex sensors

Flex sensor are sensors that change in resistance depending on the amount of bend on the sensor. They convert the change in bend to electrical resistance the more bend the more the resistance value. They are usually in the form of a thin strip from 1"-5" long that vary in resistance. They can be made uni-directional and bi-directional.

Sizes - 1K to 20K
50K to 50ohm

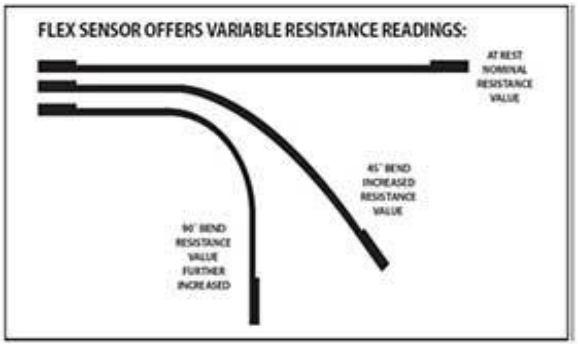

Fig 2.7 Flex sensor working

B. Arduino UNO

The Arduino Uno is a microcontroller board based on the ATmega328. It has 14 digital input/output pins (of which 6 can be used as PWM outputs), 6 analog inputs, a 16 MHz crystal oscillator, a USB connection, a power jack, an ICSP header, and a reset button. It contains everything needed to support the microcontroller.

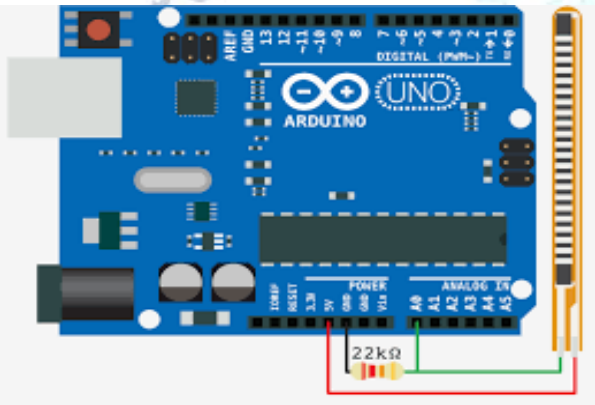

C. APR 9600

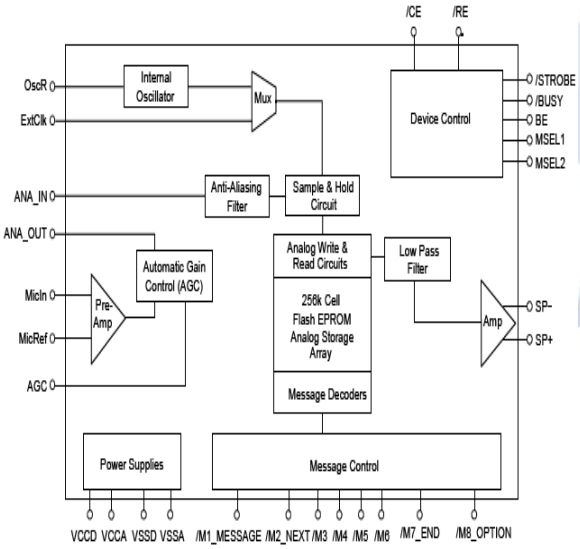

The APR9600 device offers true single chip voice recording, non volatile storage and playback capability for 40 to 60 seconds. The device supports both random and sequential access of multiple messages. Sample rates are user selectable, allowing designers to customize their design for unique quality and storage time needs. Integrated output amplifier, microphone amplifier, and AGC circuits greatly simplify system design. The device is ideal for use in portable voice recorders, toys, and many other consumer and industrial applications.

APLUS integrated achieves these high levels of storage capability by using its proprietary analog/multilevel storage technology enables the APR9600 device to reproduce voice signals in their natural form. It eliminates the need for encoding and compression, which often introduce distortion.

D. Speaker

A loudspeaker (or loud-speaker or speaker) is a device which converts electrical signal into audio signal containing alternating current electrical audio signal is applied to its voice coil, a coil of wire suspended in a circular gap between the poles of a permanent magnet, the coil is forced to move rapidly back and forth due to Faraday's law of induction, which causes (usually conically shaped) attached to the coil to move back and forth, pushing on the air to create sound waves. Besides this most common method, there are several alternative technologies that can be used to convert an electrical signal into sound. The sound source (e.g., a sound recording or a microphone) must be amplified with an amplifier before the signal is sent to the speaker. Speaker or driver type (individual units only) – Full-range, woofer, tweeter, or mid-range.

E. Power Supply

The input to the circuit is applied from the regulated power supply. The A.C input that is 230v from the main supply is step down by the transformer to 12v and is fed to the rectifier. The output obtained from the rectifier is a pulsating

D.C voltage so in order to get a pure D.C voltage the output voltage from the rectifier is fed to filter to remove any A.C components present even after rectification now this voltage is given to a voltage regulator to obtain pure constant D.C voltage.

Interfacing

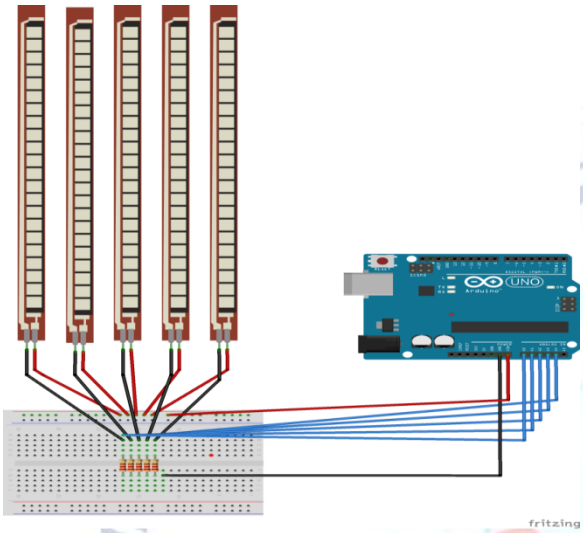

4.1 Interfacing Arduino UNO with Flex sensors

In our project when flex sensors are bent resistance is produced between two output wires, the resistors are connected to A3, A2, A1, A0 pins and this response is fed to Arduino UNO.

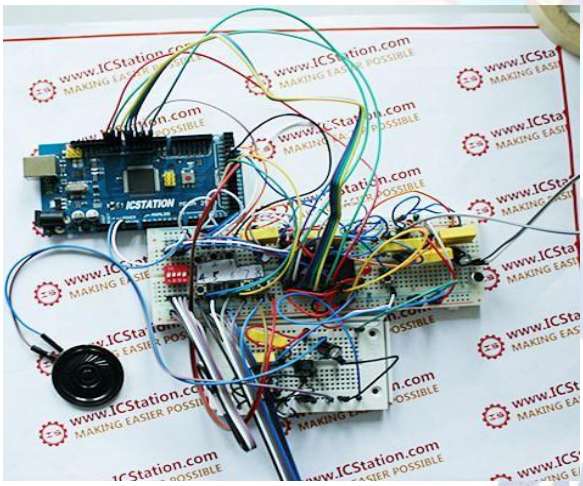

Figure 4.2 Interfacing Arduino UNO with APR 9600

In APR module voice is stored and the voice message M0 is connected to pin 2 in Arduino, M1 is connected to pin 3 in Arduino, M2 is connected to pin 4 in Arduino, M3 is connected to pin 5 in Arduino, M4 is connected to pin 6 in Arduino, M5 is connected to pin 7 in Arduino, M6 is connected to pin 8 in Arduino, M7 is connected to pin 9 in Arduino.

Performance Evolution

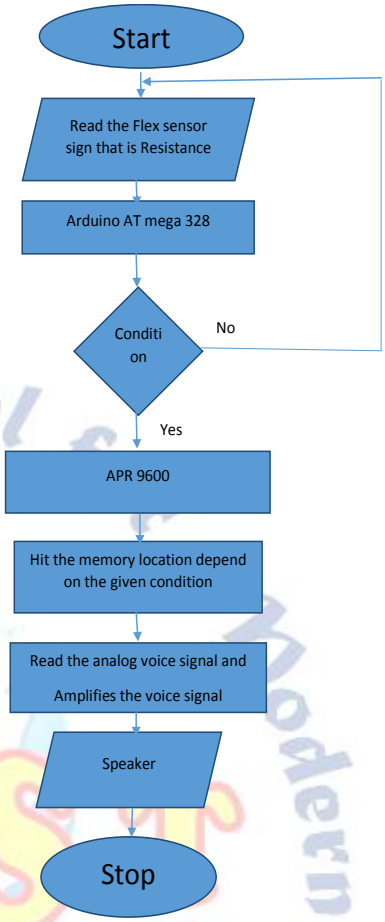

V. Results

In this Prototype version, the user forms a sign and holds it for two seconds to ensure recognition. The system is capable of recognizing signs more quickly than this arbitrary two seconds limit. Hence it is a low time consuming approach. Furthermore real time recognition ratio of nearly 99% can be easily achieved.

This project was meant to be a prototype to check the feasibility of recognizing sign language using sensor gloves. With this project the deaf or mute people can use the gloves to perform sign language and it will be converted in to speech so that normal people can easily understand.

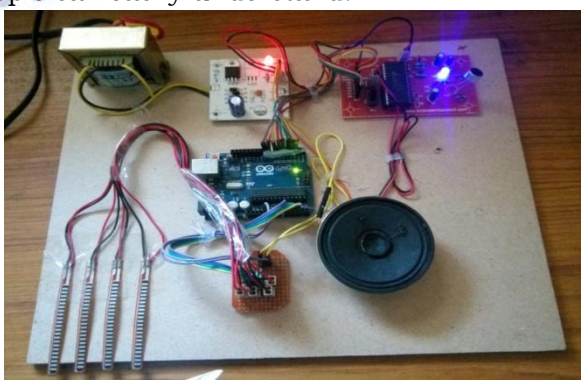

Future Scope:

There can be a lot of future enhancements associated to this research work, which includes:

1- Designing of wireless transceiver system for "Microcontroller and Sensors Based Gesture Vocalizer".
2- Perfection in monitoring and sensing of the dynamic movements involved in "Microcontroller and Sensors Based Gesture Vocalizer".
3- Designing of a whole jacket, which would be capable of vocalizing the gestures and movements of animals.

VI. Conclusion

This research paper describes the design and working of a system which is useful for dumb, deaf and blind people to communicate with one another and with the normal people. The dumb people use their standard sign language which is not easily understandable by common people and blind people cannot see their gestures. This system converts the sign language into voice which is easily understandable by blind and normal people. The sign language is translated into some text form, to facilitate the deaf people as well.

References

[1] Ata-Ur-Rehman, Salman Afghani, Muhammed Akmal and Raheel Yousaf, "Microcontroller and Sensors Based Gesture Vocalizer," 7th WSEAS International Conference on SIGNAL PROCESSING, ROBOTICS and AUTOMATION (ISPRA '08), University of Cambridge, UK, February 20-22, 2008.

[2] Kunal Kadam, Rucha Ganu, Ankita Bhosekar, Prof. S. D. Joshi, "American Sign Language Interpreter", Proceedings of the 2012 IEEE Fourth International Conference on Technology for Education.

[3] Srinivas Gutta, Jeffrey Huang, Ibrahim F. Imam,and Harry Wechsler, "Face and Hand GestureRecognition Using Hybrid Classifiers",ISBN: 0-8186-7713-9/96, pp.164-169.

[4] Jean-Christophe Lementec and Peter Bajcsy, "Recognition of Gestures Using Multiple Orientation Sensors: Gesture Classification", 2004 IEEE Intelligent Transportation Systems Conference Washington, D.C., USA, October 34, 2004, pp.965-970.

[5] Sushmita Mitra and Tinku Acharya, "Gesture Recognition: A Survey".